Notice of Meeting for the
Historic and Architectural Review Commission
of the City of Georgetown
May 23, 2019 at 6:00 PM
at City Council Chambers, 510 W 9th Street Georgetown, TX 78626

The City of Georgetown is committed to compliance with the Americans with Disabilities Act (ADA). If you require assistance in participating at a public meeting due to a disability, as defined under the ADA, reasonable assistance, adaptations, or accommodations will be provided upon request. Please contact the City Secretary's Office, at least three (3) days prior to the scheduled meeting date, at (512) 930-3652 or City Hall at 808 Martin Luther King Jr. Street, Georgetown, TX 78626 for additional information; TTY users route through Relay Texas at 711.

The Historic and Architectural Review Commission, appointed by the Mayor and the City Council, is responsible for hearing and taking final action on applications, by issuing Certificates of Appropriateness based upon the City Council adopted Downtown Design Guidelines and Unified Development Code.

Welcome and Meeting Procedures:

- **Staff Presentation**
- **Applicant Presentation (Limited to ten minutes unless stated otherwise by the Commission.)**
- **Questions from Commission to Staff and Applicant**
- **Comments from Citizens ***
- **Applicant Response**
- **Commission Deliberative Process**
- **Commission Action**

*** Those who speak must turn in a speaker form, located at the back of the room, to the recording secretary before the item they wish to address begins. Each speaker will be permitted to address the Commission one time only for a maximum of three minutes.**

Regular Session

(This Regular Session may, at any time, be recessed to convene an Executive Session for any purpose authorized by the Open Meetings Act, Texas Government Code 551.)

A Consideration and possible action to approve the Minutes from the March 28, 2019, April 25, 2019 and May 9, 2019 HARC meetings. Madison Thomas, Historic and Downtown Planner

Legislative Regular Agenda

B Public Hearing and possible action on a request for a Certificate of Appropriateness for a 1.) residential renovation, 2.) residential addition, 3.) building height modification of 1-foot from the 15-foot maximum

building height requirement to allow a building height of 16-feet, at the requested 15-foot setback of the underlying zoning district per Unified Development Code (UDC) Section 4.08.080.C 4.) a 10' setback modification along the north property line into the required 25' setback to allow for a residential structure (garage) 15' from the property line per the Unified Development Code (UDC) Section 4.08d.080.D; for the property located at 1302 College Street, bearing the legal description of 0.498 ac. Hughes Addition, Block 4n/pt (2019-16-COA). Madison Thomas, AICP, Historic and Downtown Planner

C Updates, Commissioner questions and comments. Sofia Nelson, Planning Director

Adjournment

Certificate of Posting

I, Robyn Densmore, City Secretary for the City of Georgetown, Texas, do hereby certify that this Notice of Meeting was posted at City Hall, 808 Martin Luther King Jr. Street, Georgetown, TX 78626, a place readily accessible to the general public as required by law, on the _____ day of _____, 2019, at _____, and remained so posted for at least 72 continuous hours preceding the scheduled time of said meeting.

_____
Robyn Densmore, City Secretary

City of Georgetown, Texas
Historic and Architectural Review
May 23, 2019

SUBJECT:
Consideration and possible action to approve the Minutes from the March 28, 2019, April 25, 2019 and May 9, 2019 HARC meetings. Madison Thomas, Historic and Downtown Planner

ITEM SUMMARY:

FINANCIAL IMPACT:
N/A

SUBMITTED BY:
Madison Thomas, AICP, Historic & Downtown Planner

ATTACHMENTS:

	Description	Type
	3.28.2019 HARC Meeting Minutes	Exhibit
	4.25.2019 HARC Meeting Minutes	Exhibit
	5.09.2019 HARC Meeting Minutes	Exhibit

City of Georgetown, Texas
Historic and Architectural Review Commission
Minutes
March 28, 2019, 2019 at 6:00 p.m.
Council and Courts Building
510 West 9th Street Georgetown, TX 78626

Members present: Josh Schroeder; Amanda Parr; Pam Mitchell; Steve Johnston; Lawrence Romero; Catherine Morales; Art Browner

Absent: Karalei Nunn; Terri Asendorf-Hyde

Staff present: Sofia Nelson, Planning Director; Nat Waggoner, Long Range Planning Manager; Madison Thomas, Historic and Downtown Planner;

Call to order by the Chair at 6:00 pm.

Legislative Regular Agenda

A Nomination and election of Vice-chair and Secretary for the 2019 Commission.

Motion by Browner to nominate Romero for Vice-chair for the 2019 Commission. Approved 7-0.

Motion by Catherine Morales, second by Browner for Parr to serve as Secretary for the 2019 Commission. Approved 7-0.

B Consideration and appointment of one member to the Demolition Subcommittee.

Motion by Browner to nominate Parr as a member to the Demolition Subcommittee. Approved 7-0.

C Public Hearing and possible action on a request for a Certificate of Appropriateness for the Demolition of an approximate 1,300-sq.ft. residential structure identified as a low priority resource for the property located at 903 N. Myrtle Street, bearing the legal description of 0.33 ac. Porter, N. Survey, (COA-2018- 063). Madison Thomas, Downtown Historic Planner

Thomas presented the staff report. The low priority structure was identified on the 2016 Historic Resources Survey. It was not included on the 1984 or 2007 historic resource surveys. The survey identifies as the structure having an irregular plan and no stylistic influences, it also includes that the "property lacks integrity". The property was previously a residence but is currently owned by Brookwood in Georgetown. They are currently using this structure for accessory uses for their organization. They would like to increase the housing opportunities they have for their residents, however the cost to retrofit this structure to meet their needs would be beyond the value of the home. They have an additional historic residential structure that is a medium priority home next door that they will be able to relocate. The structure has had the siding and windows replaced with non-historic materials. There is wood rot damage and termite damage. The structure lacks a distinct architectural style and integrity with non-historic materials.

Commissioner Romero opened the Public Hearing.

Speaker Perez wants the commissioners to consider the amount of traffic which has greatly increased, the size of vehicles/trucks and parking issues in a narrow street. The speaker has experienced parking issues where others have parked in front of his house and driveway. He also raised the issue of water drainage. He already experiences this problem when it rains and expects it to worsen.

Commissioner Romero called the second public speaker.

Speaker Mohammed, raised concerns of high traffic in the area. The street is narrow, and this problem is going to worsen if this demolition is approved.

Commissioner Romero called the third public speaker.

Jennifer Gwen, also raised the same concerns of high traffic that currently exists in the area. The number of cars there is more than what it should be. This project should not be approved; the infrastructure cannot support the amount of traffic.

Commissioner Romero closed the Public Hearing

Thomas clarified details of the applicant's request for demolition and the board's purview, which is to review the request and if it meets the required criteria. Thomas provided more information related to the process to develop on the property, zoning, and permitted use. Provided detailed information on meeting criteria and staff review process.

Motion by Parr to approve COA-2018- 063. Second by Johnston. Approved 7-0.

D Public Hearing and possible action on a request for a A Certificate of Appropriateness for: 1) 13' 1" setback encroachment along the north property line into the required 25' setback, allowing for a residential structure 11' 11" from the property line per the Unified Development Code (UDC) Section 4.08d.080.D; 2)street facing patio addition, for the property located at 1601 E. 17th Street, bearing the legal description of 0.33 ac. Nolan Addition, Block 9, Lot 3-4 (2019-5-COA). Madison Thomas, Downtown Historic Planner

Thomas presented the staff report. The applicant is requesting to expand the existing patio. The application is also proposing to add a 520 sq. ft. carport to accommodate two cars. The required height at the setback is a max. of 15' and the applicant is proposing a height of 12', which is lower than the roof of the existing house. The proposed carport will be in the rear yard of the home adjacent to Louise St., where a paved driveway currently exists. The applicant is requesting a setback encroachment to allow the carport to be placed where the existing driveway is and parallel to the existing house, which is set back 11' 11.25" from the street side lot line. The Unified Development Code Sec. 6.02.050 requires a street facing garage to be set back a minimum of 25'. The applicant is requesting to place the garage 11' 11.25" from the property line. The purpose of the setback request is to allow the plane of the proposed carport line up with the plane of the existing façade of the home, to keep a consistent setback line along Louise St. for this lot, and to reduce conflicts of locating the proposed carport almost centered behind the existing house.

Question by Parr regarding compliance and criteria. Thomas provided explanation of alternatives for carport and compliance with the criteria.

Chair Schroeder opened the Public Hearing with no speakers coming forth, and then closed the Public Hearing.

Motion for denial of 2019-5-COA by Romero due to failure to comply with criteria A requirements. Second by Parr, with open for discussion.

Discussion between the Commission members and Thomas about the design and layout requested by applicant, and compliance with criteria.

Motion by Browner to approve 2019-5-COA. Second by Morales. Approved 3-2.

E Discussion and possible action regarding the potential Historical and Architectural Review Committee meeting and training schedule for the 2019-2020 calendar year.

Thomas provided HARC training schedule and provided details for training. Additional topics for training to be added and how training topics were selected.

F Updates, Commissioner questions and comments. Sofia Nelson, Planning Director Adjournment

At next HARC meeting, changes to UDC from Council perspective. HARC meeting twice a month.

Adjournment

Motion to adjourn by Browner. Second by Parr. The meeting adjourned at 7:13 pm.

_____ _____

Approved, Josh Schroeder, Chair Attest, Lawrence Romero, Secretary

City of Georgetown, Texas
Historic and Architectural Review Commission
Minutes
April 25, 2019, 2019 at 6:00 p.m.
Council and Courts Building
510 West 9th Street Georgetown, TX 78626

Members present: Josh Schroeder; Amanda Parr; Pam Mitchell; Lawrence Romero; Catherine Morales; Art Browner; Karalei Nunn; Terri Asendorf-Hyde

Absent: Steve Johnston;

Staff present: Nat Waggoner, Long Range Planning Manager; Madison Thomas, Historic and Downtown Planner;

Call to order by the Chair at 6:00 pm.

Legislative Regular Agenda

A. Consideration and possible action to approve the Minutes from the February 28, 2019 HARC meeting. Madison Thomas, AICP, Historic and Downtown Planner.

Minutes were not attached. Will be reviewed at the following meeting.

B. Public Hearing and possible action on a request for a Certificate of Appropriateness for : 1) 10' setback encroachment along the property line adjacent to the unimproved Ash Street, into the required 15' setback, allowing for a residential structure 5' from the property line per the Unified Development Code (UDC) Section 4.08d.080.D; for the property located at 407 E. 5th Street, bearing the legal description of 0.33 ac. Glasscock Addition, Block 32, Lot 3-4 (COA-2018-59). Madison Thomas, AICP, Historic and Downtown Planner.

Thomas presented the staff report. The applicant is requesting to add a carport adjacent to the existing garage at the rear and side of the lot which also contains a historic home. The carport is proposed to be 240 square feet and will match the two other existing structures in roof pitch, roof materials which is metal roofing, siding materials which is hardie and color. The applicant is requesting a 10' encroachment along the property line adjacent to the unimproved Ash Street, into the required 15' setback, allowing a residential structure 5' from the property line. The applicant is requesting this encroachment to align the carport up with the existing driveway and because other areas for a carport on the site are limited.

Chair Schroeder open the Public Hearing, with no speakers coming forth, and then closed the Public Hearing.

Motion by Nunn to approve **COA-2018-59** with staff recommended conditions.

Romero sought clarification about property details and project details.

Motion to vote by Schroeder. Approved 8-0.

C Public hearing and possible action for the demolition of a high priority structure located outside of the historic overlay districts at 608 W. 15th Street. Madison Thomas, AICP, Historic and Downtown Planner.

Thomas presented the staff report. The structure was identified as a high priority structure on the 2016 Historic Resources Survey. It was also on the 1984 or 2007 historic resource surveys as a high priority structure. According to the 2016 Historic Resource Survey, the single story structure is estimated to have been built in 1890 and retains sufficient (architectural) integrity and is an excellent or rare example of its type or style. The 2016 survey identifies the structure as an L-plan with Folk Victorian stylistic influences. The property is not located in either of the historic overlay districts but located in a neighborhood a few blocks west of Old Town. The applicant considered relocation, however it has been confirmed that due to the structure and condition of the home, relocation is not an option. The structure has deteriorated beyond a reasonable amount of repair and maintenance. In its current state it cannot be re-occupied. To bring it to a livable condition, the foundation would need to be leveled and the flooring replaced, the single wall construction would need to be converted to double to allow for electric/gas and plumbing. Existing gas and water plumbing pose safety issues due to the "makeshift" installation and it appears to have extensive termite damage.

Chair Schroeder open the Public Hearing with no speakers coming forth, and then closed the Public Hearing.

Motion by Parr to approve the demolition with the archival record.

Chair Schroeder called the applicant to the podium. Peyton Lewis, the applicant, spoke about meeting the criteria, costs of moving the structure and restoring the structure. He also answered questions from Commission members.

Motion second by Romero. Approved 8-0.

D Consideration and review of by-laws, including the proposed revision that would establish provisions for two regular meetings per month and the attendance policy. Madison Thomas, AICP, Historic and Downtown Planner.

Thomas presented the by-laws and discussed the change for two regular HARC meetings per month. There was a discussion of dates and when to hold the second meeting among commission members. The Commission members agreed on the second and fourth Thursday of the month for meetings.

E Presentation and discussion on the process and standards related to the Unified Development Code HARC approval criteria. Madison Thomas, AICP, Historic and Downtown Planner.

Thomas reviewed the UDC approval criteria with the Commission members. Section 3.13 of the Unified Development Code outlines the review and approval process for modifications, infill, signage and demolition of historic resources both within and outside of the historic districts in

Georgetown. Thomas provided an overview of the process and answered Commission member questions.

Chair Schroeder asked Thomas questions regarding motions, clarification of details to be provided when making a motion, including providing the reasons for denials.

F Updates, Commissioner questions and comments. Sofia Nelson, Planning Director

Next meeting is scheduled for May 9, 2019.

Adjournment

Motion to adjourn by Romero. Second by Asendorf-Hyde. The meeting adjourned at 6:53 pm.

_____ _____

Approved, Josh Schroeder, Chair Attest, Lawrence Romero, Secretary

City of Georgetown, Texas
Historic and Architectural Review Commission
Minutes
May 9, 2019, 2019 at 6:00 p.m.
Council and Courts Building
510 West 9th Street Georgetown, TX 78626

Members present: Josh Schroeder; Lawrence Romero; Terri Asendorf-Hyde; Art Browner

Absent: Amanda Parr; Pam Mitchell; Steve Johnston; Catherine Morales; Karalei Nunn

Staff present: Sofia Nelson, Planning Director; Nat Waggoner, Long Range Planning Manager; Madison Thomas, Historic and Downtown Planner; Mark Moore, Assistant Chief Building Official

Call to order by the Chair at 6:00 pm.

A. Consideration and possible action of the Minutes from the February 28, 2019 HARC meeting. Nat Waggoner, Recording Secretary.

Motion by Romero, second by Asendorf-Hyde to approve the minutes as presented. Approved 4 – 0.

B. Consideration and possible action of the Minutes from the March 28, 2019 Special Session HARC meeting. Nat Waggoner, Recording Secretary.

Motion by Romero, second by Asendorf-Hyde to approve the minutes as presented. Approved 4 – 0.

C. Consideration and possible appointment(s) of Commissioner(s) to the Demolition Subcommittee. Nat Waggoner, Recording Secretary

Motion by Romero, second by Browner to approve adding Laralei Nunn to Demolition Subcommittee. Approved 4 – 0.

D. Public Hearing and possible action on a request for a Certificate of Appropriateness for a Commercial Renovation at the property located at 806 S. Myrtle St., bearing the legal description of a .07ac. Glasscock Addition, Block 9, Lot 3-4 (PTS), (2019-14-COA). Madison Thomas, AICP, Historic & Downtown Planner

Thomas presented the staff report. The property is a one-story wood frame commercial building with wood siding, stepped wood parapet and a shed roof over the entrance. The 2016 Historic Resources Survey identifies the structure as an excellent or rare example of its style and or has significant associations and it retains sufficient integrity. It is also noted as a good example of an early twentieth century frame commercial building and one of the city's first auto garages. The survey notes that the overhead door, porch posts and siding replaced between the 1984 and 2007 surveys. The applicant is requesting to replace the wood siding on all facades of the home with hardie siding. It is unknown if wood siding was the original siding material used for this structure, as it was originally an auto body shop. However, the 1984 Historic Resources Survey identifies wood siding on the structure. The changes to the street-facing facades are HARC's purview.

The applicant, Rob Skelton, is requesting to replace the existing wood siding on all facades of the structure with hardie siding. These renovations will maintain the original look of the building. The applicant would like to replace the wooden siding on the non-street facing facade with 6" hardie plank siding. The existing siding is rotting and has gaps from the weather. Due to the age of the siding, they no longer make the same size boards. The applicant would also like to replace the front door and windows.

The Commission members asked the applicant various questions regarding the building, extent of damage, renovations, and alternative materials to update the building.

Chair Schroeder opened the Public Hearing with no speakers coming forth, and then closed the Public Hearing.

Discussion among the Commission members, Thomas, and Moore. Moore answered various questions regarding the building, damage to the building, material alternatives to renovate the building, and criteria. The Commission members requested clarification from the applicant on proposed renovations.

Motion by Romero to deny the application for 2019-14-COA based on non-compliance with criteria 5.1, 5.2, 5.4, and 5.5. Second by Browner, adding Sec. 3.13.030 UDC Criteria, 3, 4 and 5 non-compliance.

Motion by Commissioner Schroeder to amend previous motion and deny the request based on Design Guidelines policies 5.1, 5.2, 5.4 and 5.5 and Criteria 3, 4 and 5. 4-0 approved to amend the motion. Motion approved 4 – 0.

E. Public Hearing and possible action on a request for a Certificate of Appropriateness for a Residential Renovation at the property located at 1304 E. University Ave., bearing the legal description of .43ac. Outlot Division B, Block 11 (PT), (2019-20-COA). Madison Thomas, AICP, Historic & Downtown Planner

Thomas presented the staff report. The applicant is requesting to replace the existing wood (cypress and pine) siding on the home with hardie siding and replace the existing wood windows with a fiber composite window. The home is identified in the 2016 Historic Resources Survey; it is described as an 1890 L-plan with a one-and-a-half story wood frame dwelling with a gable roof with shingles. The survey does not indicate a specific stylistic influence. Until recently, the house had asbestos tile when the applicant removed the tile and found existing wood siding underneath. The windows have signs of water damage, including peeling paint, rot, and warping. The majority of the home was covered in cypress wood siding and with the rear addition in pine siding. The changes on the street-facing facades are HARC's purview.

The Commission had several questions relating to the criteria, effect of renovations on the look of the home, and the issue of asbestos. There was also discussion about the design guidelines.

The applicant, Abdulwahab Makiya, spoke and explained that during prior renovations and asbestos removal, it was discovered that home was built in two stages. The quality of the wood has deteriorated over time. The applicant noted that he searched for a supplier for cypress

wood but was not able to find anyone that could provide the material. In addition, there would be extensive costs to preserve the home with similar original material.

Asendorf-Hyde had questions relating to the materials and alternatives. Moore provided information regarding the home and damage. Moore provided an explanation of the difference between pine and cypress wood, effect if used on the home, and other issues to be addressed in the home. Asendorf-Hyde also had concerns related to the use of hardie and if it would change the look of the home.

Thomas provided clarification on other parts of the home the applicant is renovating, and what types of changes require approval of COA's and which don't.

Chair Schroeder opened the Public Hearing with no speakers coming forth, and then closed the Public Hearing.

Discussion among Commission members regarding aesthetic of the home, material use and meeting criteria.

Motion by Schroeder to approve replacement of siding with hardie plank and replacing of windows as requested by applicant. In favor by Schroeder and Browner. Opposed by Asendorf-Hyde and Romero. Motion failed to achieve majority vote.

Nelson discussed providing additional information to help committee in decision making. Provided suggestions regarding the item and further motions. Chair Schroeder had questions related to suggestion of motion on conditions of meeting criteria and asked applicant further questions regarding the project.

Motion by Asendorf-Hyde to approve 2019-20-COA with the condition that the applicant use pine to replace the siding as opposed to hardie plank (based on criteria 5.1, 5.2, 5.4), and approve the replacement of the windows as requested by the applicant. Second by Browner. Approved 4 – 0.

F. Presentation and discussion of the Downtown and Old Town Design Guidelines. Focusing on the review and policies for the Downtown, Area 1 and Area 2. Madison Thomas, AICP, Historic & Downtown Planner

Thomas presented the staff report. Thomas provided the Commission an overview of the Downtown Design Guidelines Chapter 1, Chapter 12 and Chapter 13. Chapter 1 will focus on the Designs Goals for Area 1, how the guidelines are used, and the format of the guidelines. Chapter 12 has the guidelines for Infill Construction in Area 1 of the Downtown Overlay and Chapter 13 is Infill Construction in Area 2 of the Downtown Overlay.

Discussion between Thomas and Schroeder regarding commercial and residential uses of buildings. Thomas explained the guidelines, allowing for flexibility by the Board. Schroeder discussed guidelines and obtaining clarification on compliance of guidelines.

Thomas discussed the walking tour, to be scheduled before the next meeting on May 23, 2019.

G. Updates, Commissioner questions and comments. Sofia Nelson, Planning Director

Nelson promoted the gateways survey for the 2030 Comprehensive Plan currently on the Department website for board members to take.

Adjournment

Motion to adjourn by Browner, second by Romero. Meeting adjourned at 7:24 pm.

_____ _____

Approved, Josh Schroeder, Chair Attest, Lawrence Romero, Secretary

City of Georgetown, Texas
Historic and Architectural Review
May 23, 2019

SUBJECT:
Public Hearing and possible action on a request for a Certificate of Appropriateness for a 1.) residential renovation, 2.) residential addition, 3.) building height modification of 1-foot from the 15-foot maximum building height requirement to allow a building height of 16-feet, at the requested 15-foot setback of the underlying zoning district per Unified Development Code (UDC) Section 4.08.080.C 4.) a 10' setback modification along the north property line into the required 25' setback to allow for a residential structure (garage) 15' from the property line per the Unified Development Code (UDC) Section 4.08d.080.D; for the property located at 1302 College Street, bearing the legal description of 0.498 ac. Hughes Addition, Block 4n/pt (2019-16-COA). Madison Thomas, AICP, Historic and Downtown Planner

ITEM SUMMARY:

FINANCIAL IMPACT:
N/A

SUBMITTED BY:
Madison Thomas, AICP, Historic & Downtown Planner

ATTACHMENTS:

	Description	Type
	Exhibit 1- Location Map	Exhibit
	Exhibit 2- Letter of Intent	Exhibit
	Exhibit 3- Plans and Renderings	Exhibit
	Exhibit 4- Historical Information	Exhibit
	Exhibit 5- Texas Historical Commission Letter	Exhibit
	Exhibit 6- Site Information and Tree Survey	Exhibit
	Exhibit 7- Public Comments	Exhibit
	Staff Report	Exhibit

Location Map

2019-16-COA

Exhibit #1

Legend
- Site
- Parcels
- City Limits
- Georgetown ETJ

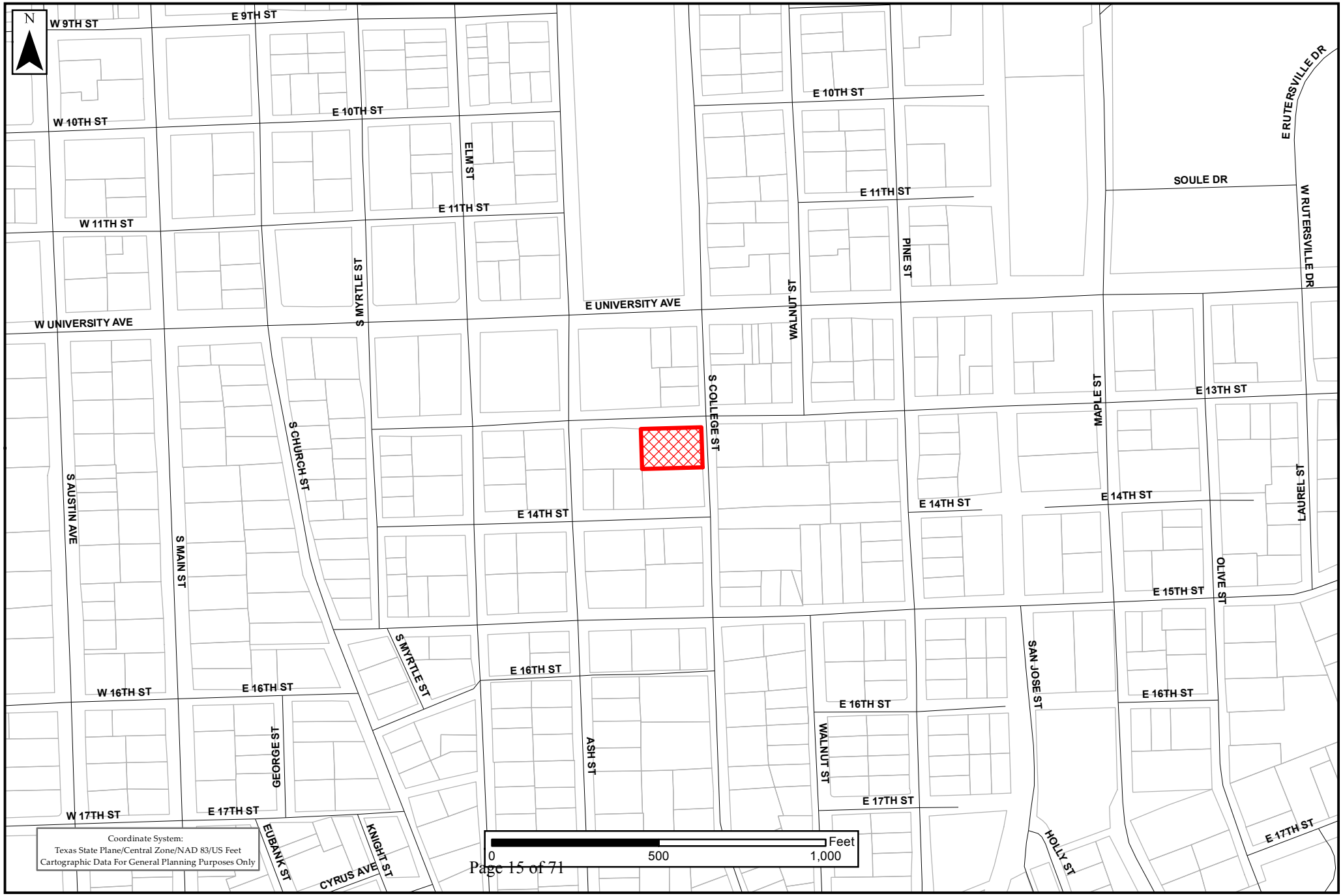

March 8, 2019 (Revised May 11, 2019)

Mr. Mark Wolfe
% Division of Architecture
Texas Historical Commission
P.O. Box 12276
Austin, TX 78711-2276

Subject: Restoration of Lane -G. W. Riley House 1302 South College Street, Georgetown TX - Letter of Intent **(Revised)**

Dear Mr. Wolfe:

Lane – W. G. Riley House
1302 College Street. Georgetown, Texas

Reference is made to our Phase 1 submittal which is dated December 20, 2018 and which was approved on January 8, 2019. Items number 1 thru 3 of the Phase 1 submittal have been completed and work to implement the remaining four (4) items began on March 7, 2019.

(936) 634-6671 3913 SOUTH CHESTNUT, LUFKIN, TEXAS 75901 FAX (936) 639-6697
TBPE FIRM REGISTRATION # F-2731

Lane - G. W. Riley House 1302 South College Street, Georgetown TX - Letter of Intent

The subject property is a "**Recorded Texas Historic Landmark**" described as follows:

One-and a-half-story wood-frame dwelling with central-hall with early rear ell addition; exterior walls with board and batten; cross gable roof with wood-shingle covering; front elevation faces east; one exterior and one interior stone chimney, each with corbeled cap; wood-sash double-hung windows with 4/4 and 6/6 lights; single-door entrance with transom and sidelights; one-story one-bay porch with shed roof on east elevation; wood posts.

Other noteworthy features include symmetrical three-bay facade; gabled extension with central doorway rises above center bay; exterior chimney with ashlar-cut stone construction extends from north gable end of original; interior stone chimney rises from rear ell; rear ell has gabled extensions--two on north side and one on south side; each gable with 4/4 light windows. Outbuildings include stone-lined cistern with pyramidal roof covering.

Historical Marker Text

Built 1872 by the Rev. S. J. Lane, chaplain, Southwestern University; founder, First Methodist church, Georgetown. Bought 1903 by the Rev. George W. Riley (1853-1925), a grandson of Llano County Indians' 1859 victim, the Rev. Jonas Dancer. G. W. Riley founded or served Methodist churches in Abilene, Beaumont, Douglassville, Mineral Wells, Tyler, and other towns for 48 years. He and wife, Beulah G. (Matthews) moved here to educate children; house remains in family.

Recorded Texas Historic Landmark - 1972

The intent of this project is to:

1. Completely restore the street-facing sides of the existing house. Specifically the board and batten siding and historic windows will be retained, cleaned, repaired and repainted as recommended by the National Park Service Standards for Rehabilitation.
2. Maintain the appearance of the street-facing East and North sides of the building unchanged with the exception of two minor modifications (the non-historic shutters will be removed from the east and south walls and the door above the east porch will be removed and one of the windows removed from the south wall will be installed in its place as approved by THC).
3. Replace the existing composition roofing on the north and east sides of the house and on the cistern pyramidal roof covering with cedar shake shingles (as shown on 1959 historic photographs).
4. Regrade the lot to provide a level pad around the house without disturbing the existing trees and install storm drainage as required.
5. Completely replace the existing foundation with new pads, piers, beams and floor joists and rock skirting. The existing center portion of the floor, which is lower than the front and back area floors will be raised to provide a continuous level floor at approximately 757 feet elevation.
6. Increase the footprint of the house by approximately 380 square feet, by removing the southwest wall of the front room and the south wall of the rear ell and building a new wall from the south wall of the front room to back of the house.
7. The existing windows will be removed and stored. The removed siding will be stored and then reused to repair the siding on the street facing sides of the house.

8. Install new pads, piers, skirting, floor joists, studs, rafters, decking, siding and insulation to construct the two story addition by adding the two-story wall and changing the roof pitches.
9. Install cedar shake shingles on the steep portions of the new roof and architectural standing seam roofing on the flatter portion.
10. Install new energy efficient windows and doors equal to Pella Architect Series Traditional 850 with ILT grille pattern on the addition south wall.
11. Install, seal and paint wood clapboard siding, equal to "1" X 6" D Grade 105", on the south and west walls of the addition.
12. Restore and paint the existing siding and windows on the west wall and the south wall of the front room.
13. Remove the existing door on the west wall and install a new patio door equal to Pella Architect Series Traditional 850 with ILT grille pattern at a location approximately three feet north of the removed door.
14. Install a “wraparound” porch with a wood deck, square wood posts, limestone skirting and architectural standing seam roofing (matching the style, slope and color of the roof on the addition) on the south and west sides of the house.
15. Install a new, north-facing garage with architecture similar to the existing house on the northwest portion of the property with a gravel driveway
16. Install “picket-style” fencing and gravel walkways.
17. Install site and exterior building accent lighting and landscaping appropriate to the site, using native plants as much as possible.

The existing board and batten siding will be restored as recommended by the National Park Service Standards for Rehabilitation by removing unsalvageable materials and replacing them with like or similar materials to retain the existing appearance. Material removed from the existing south and west walls will be used to patch the street facing walls. The retained existing windows on the original structure will be restored and painted

The ceiling and floor structure above the east room will be upgraded, using wooden trusses, to current codes to support the second floor which will lower the ceiling by twelve inches or less. The existing east porch will be rebuilt and restored.

A second floor with stairs will be added to the west wing of the structure as part of the addition resulting in an average ceiling height of approximately nine feet. The existing fireplaces will be retained and repaired and the center fireplace hearth will be raised and modified to match the new floor elevation. The foundations on both hearths will be rebuilt or repaired

The floor, walls and roof will be insulated and equipped with a vapor barrier. The existing floor material will be salvaged and reused to the greatest extent practical and new or salvaged wall materials will installed throughout. The existing light fixtures will be used where possible as will the existing cabinets.

New HVAC, electrical and plumbing systems will be installed with a new underground electrical service run to the northwest side of the building. Exterior lighting will be period appropriate. New kitchen appliances and counters will be install along with three full bathrooms and one half-bathroom. There will be three bedrooms, a laundry room, a mud room / entry hall and closets.

The well and well roof will be repaired and restored using the same materials.

G. W. Riley House 1302 South College Street, Georgetown TX - Letter of Intent

A new, north-facing garage with architecture similar to the existing house will be installed on the northwest portion of the property. The total slab area is 600 square feet (560 Sq. Ft. interior area) with an unfinished attic above. The garage is designing to look similar to the main house with 10' high walls and 12:12 pitch roofs. The garage will be frame construction on a slab-on grade with "Hardiplank" siding with battens to simulate the board and batten siding on the house. The windows will be single pane, multi-light simulating the existing windows. Two steel personnel doors with windows will be installed. The garage doors will be 9' x 7' steel panel equal to Amarr Oak Summit 1000 with Stockton windows. The space above the garage will be unfinished and used for storage and accessed with a pull-down stair. The roof will be constructed similar to the house roof using cedar shake shingles. The driveway will be gravel topped with SB2 material. A variance in the setback from the property line which is approximately 15 feet from the curb (30' setback from the curb) is requested to avoid damage to historic tree #1080 (Reference UDE Section 8.02.050.B.1)

A variance is requested for a new "picket style" fencing, not to exceed 4 feet in height and with 50 transparency will be installed between the house and the garage and between the garage and existing high fence and the house and the existing high fence on the south side of the lot. Because of the size of the lot and the height of the building walls, it is felt that a 3 foot fence would be out of proportion and would not screen the condensing units or contain pets. Landscaping will be enhanced in accordance with HARC guidelines.

The garage will be cover approximately 7.2% of the back yard. The impermeable area of the structures will be approximately 12.61% of the total lot.

Our intent is to preserve the historic character of the house and create a usable two-story contemporary residence by add a large dormer (gable extension) on the south (non-street facing) side of the house using materials that clearly distinguish the addition from the historic portion of the building. The wrap around porch replaces the removed screened-in porch and provides significant outdoor living space with a minimum impact on the street facing facades.

Attached are the documents for Phase 1 for your reference and the plans for the demolition of existing facilities and the restoration and construction of the addition, porch and garage. Please let us know other ways we can save and restore this beautiful building.

The foundation and condition of the lower portions of the siding have been found to be in worse condition than originally anticipated, but we are working on ways to overcome the existing conditions. We would appreciate an expedited review (and hopefully approval) of this project so that we can keep the foundation contractor on the job to install the foundations for the addition and wrap-around porch.

SINCERELY,

T. L. (Tom) Paxson PE, FNSPE
President

Enclosures: Phase 1 Documents, Demolition Drawings, Renovation Drawings, Garage Drawings
Cc: Madison Thomas, City of Georgetown Historic & Downtown Planner

(936) 634-6671 3913 SOUTH CHESTNUT, LUFKIN, TEXAS 75901 FAX (936) 639-6697
TBPE FIRM REGISTRATION # F-2731

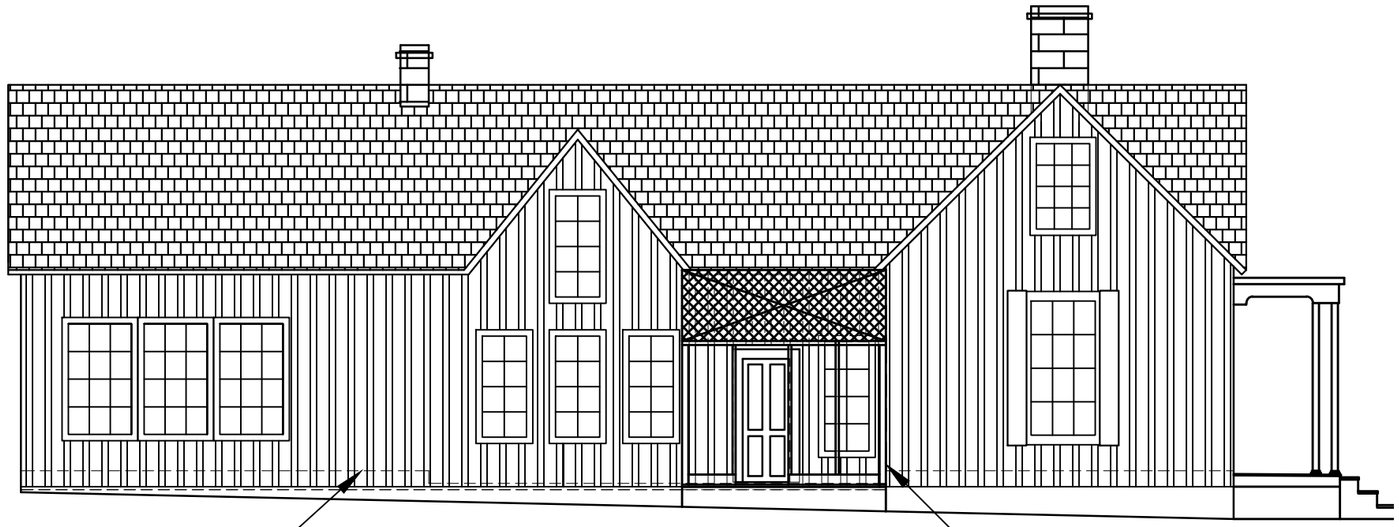

1 A2.1 **SOUTH ELEVATION**
SCALE: 1/8" = 1'-0"

PHASE 1: REMOVE EXISTING FLOORING THROUGHOUT THE HOUSE IN PREPARATION FOR FOUNDATION REPAIR

PHASE 1: REMOVE EXISTING SCREENED PORCH ON SOUTH SIDE OF THE HOUSE IN PREPARATION FOR FOUNDATION REPAIR

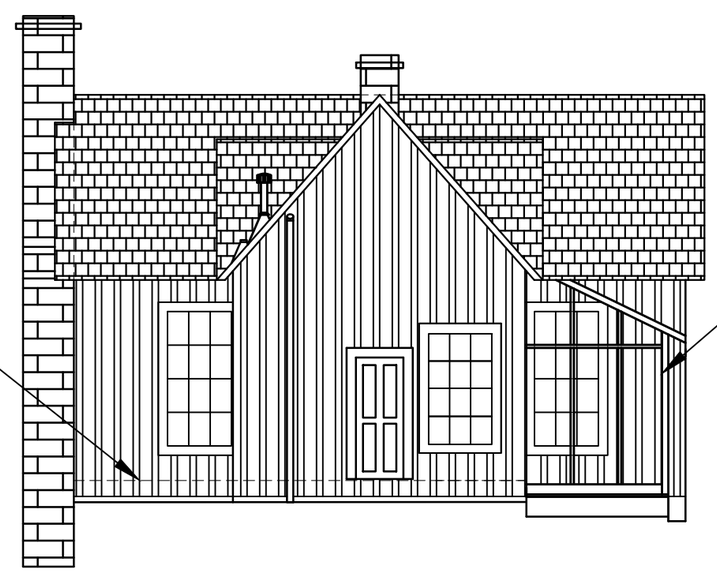

2 A2.1 **WEST ELEVATION**
SCALE: 1/8" = 1'-0"

THE SEAL APPEARING ON THIS DOCUMENT WAS AUTHORIZED BY THOMAS L. PAXSON, P.E. ON 03/08/19. ALTERATION OF A SEALED DOCUMENT WITHOUT PROPER NOTIFICATION TO THE RESPONSIBLE ENGINEER IS AN OFFENSE UNDER THE TEXAS ENGINEERING PRACTICE ACT. TBPE REGISTRATION # F-2731

STATE OF TEXAS
T. L. PAXSON
57556
REGISTERED PROFESSIONAL ENGINEER
3/08/19

NO.	DATE	BY	DESCRIPTION

DRAWN	DATE
TLP	03/08/2019
CHECKED	DATE
TLP	03/08/2019
APPROVED	DATE
TLP	03/08/2019

Tom Paxson, Pe, PMP, Pax-Sun Engineering, Inc. 5/11/2019 6:19 PM EXISTING-PHASE-1.dwg

PAX-SUN ENGINEERING, INC.
3153 SOUTH CHESTNUT, LUFKIN, TX 75901
(936) 634-4471 FAX - (936) 634-4491
TBPE REGISTRATION # F-2731

PAXSON HISTORIC RESTORATION
1302 SOUTH COLLEGE STREET
GEORGETOWN, TEXAS 78628-7020
EXISTING ELEVATIONS

CONTRACT NO. E4117

SHEET NO. A2.1

PHASE 1

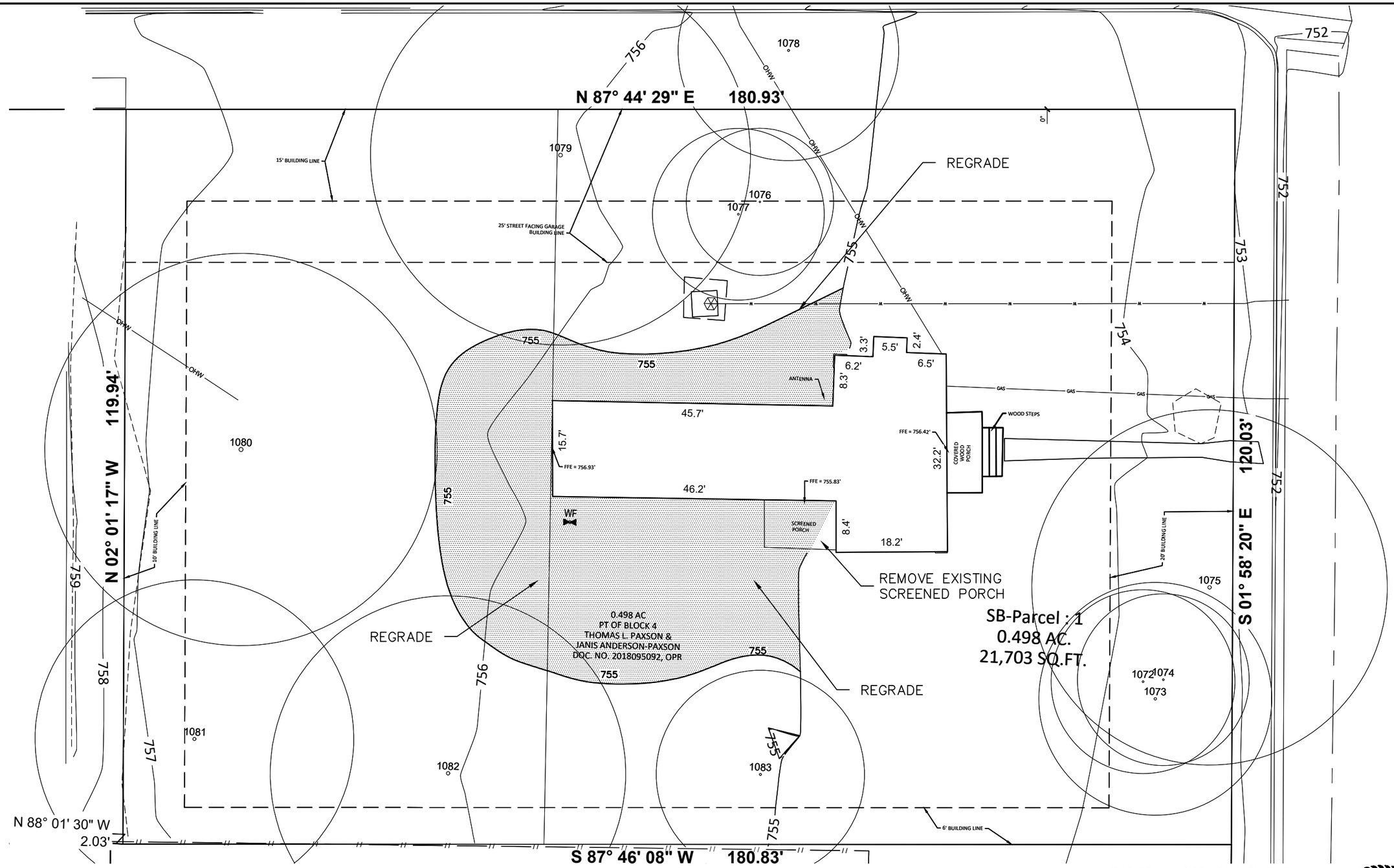

PHASE 1: REMOVE EXISTING SCREENED PORCH ON SOUTH SIDE OF THE HOUSE AND REGRADE SHADED AREA TO APPROXIMATE 755' ELEVATION IN PREPERATION FOR FOUNDATION REPAIR

N

1 / CS1.1 **EXISTING SITE PLAN**
SCALE: 1/16" = 1'-0"

THE SEAL APPEARING ON THIS DOCUMENT WAS AUTHORIZED BY THOMAS L. PAXSON, P.E. ON 03/08/19. ALTERATION OF A SEALED DOCUMENT WITHOUT PROPER NOTIFICATION TO THE RESPONSIBLE ENGINEER IS AN OFFENSE UNDER THE TEXAS ENGINEERING PRACTICE ACT. TBPE REGISTRATION # F-2731

STATE OF TEXAS
T. L. PAXSON
57556
REGISTERED PROFESSIONAL ENGINEER
3/08/19

NO.	DATE	BY	DESCRIPTION

DRAWN	TLP	03/08/2019 DATE
CHECKED	TLP	03/08/2019 DATE
APPROVED	TLP	03/08/2019 DATE

Tom Paxson, PE, FNSPE, Pax-Sun Engineering, Inc. 5/11/2019 8:19 PM EXISTING-PHASE-1.dwg

PAX-SUN ENGINEERING
3930 S. GEORGETOWN, SUITE 100 GEORGETOWN, TX 78626
(512) 634-6871 FAX - (866) 634-6891
TBPE REGISTRATION # F-2731

PAXSON HISTORIC RESTORATION
1302 SOUTH COLLEGE STREET
GEORGETOWN, TEXAS 78628-7020
EXISTING SITE PLAN

CONTRACT NO. E4117

SHEET NO. **CS1.1**
PHASE 1

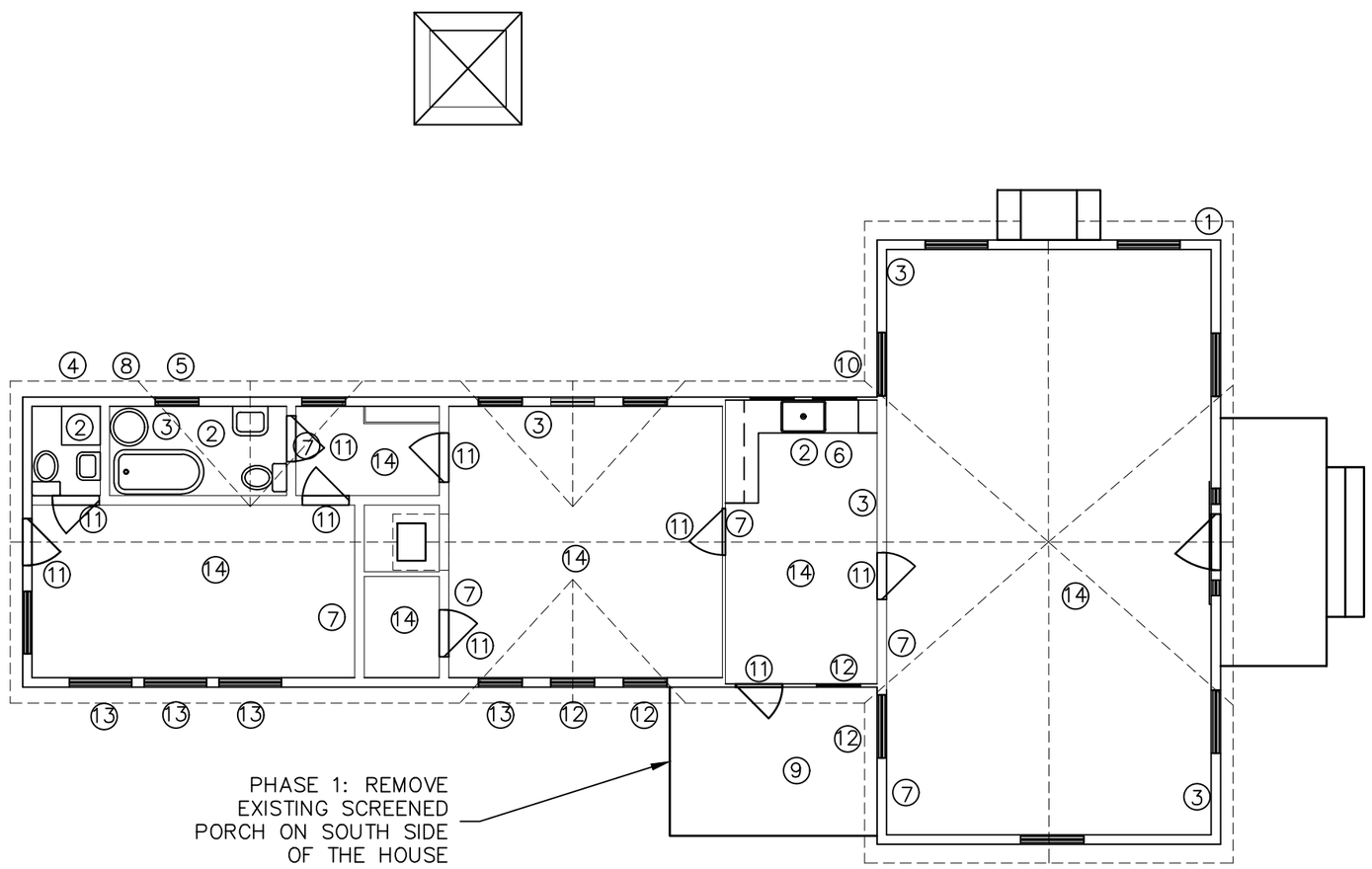

DEMOLITION NOTES:

1. REMOVED METER
2. REMOVE PLUMBING FIXTURE
3. REMOVE GAS PIPE
4. REMOVE FLUE
5. REMOVE DRAIN AND VENT
6. REMOVE KITCHEN CABINETS AND STORE
7. REMOVE WALL
8. REMOVE WATER HEATER
9. REMOVE PORCH
10. REMOVE ANTENNA
11. REMOVE DOOR
12. REMOVE AND SAVE WINDOW
13. MOVE EXISTING WINDOW TO BE MOVED TO ADDITION
14. REMOVE AND STORE WOOD FLOORING

N

1 / D1.1 **EXISTING FLOOR PLAN**
SCALE: 1/8" = 1'-0"

THE SEAL APPEARING ON THIS DOCUMENT WAS AUTHORIZED BY THOMAS L. PAXSON, P.E. ON 03/08/19. ALTERATION OF A SEALED DOCUMENT WITHOUT PROPER NOTIFICATION TO THE RESPONSIBLE ENGINEER IS AN OFFENSE UNDER THE TEXAS ENGINEERING PRACTICE ACT. TBPE REGISTRATION # F-2731

STATE OF TEXAS
T. L. PAXSON
57556
REGISTERED PROFESSIONAL ENGINEER
3/08/19

NO.	DATE	BY	DESCRIPTION

	DATE
DRAWN TLP	03/08/2019
CHECKED TLP	03/08/2019
APPROVED TLP	03/08/2019

Tom Paxson, PE, FNSPE, Pax-Sun Engineering, Inc. 5/11/2019 8:19 PM EXISTING-PHASE-1.dwg

PAX-SUN ENGINEERING
JEFF SUN - (512) 633-7338
(830) 634-4671 FAX - (830) 634-8691
TBPE REGISTRATION # F-2731

PAXSON HISTORIC RESTORATION
1302 SOUTH COLLEGE STREET
GEORGETOWN, TEXAS 78628-7020
FIRST FLOOR INTERIOR DOMOLITION PLAN

CONTRACT NO. E4117

SHEET NO. **D1.1**
PHASE 1

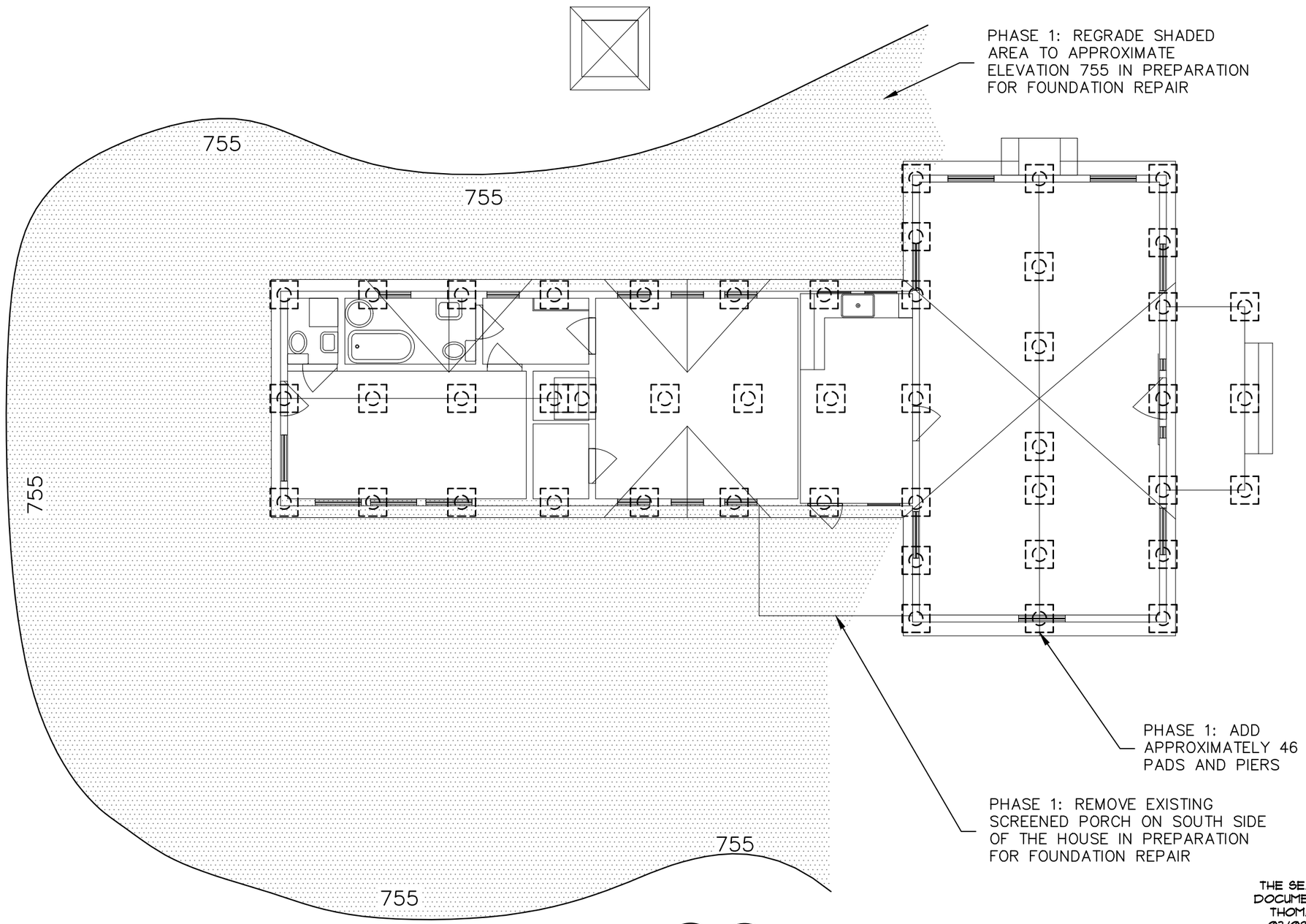

PHASE 1:

1. REGRADE SHADED AREA AROUND HOUSE TO 755' ELEVATION.
2. REMOVE EXISTING SCREENED PORCH ON SOUTH SIDE OF THE HOUSE.
3. REMOVE EXISTING WOOD FLOORS AND SALVAGE MATERIAL FOR FUTURE USE.
4. LEVEL HOUSE AND EAST PORCH.
5. INSTALL FOUNDATION PADS AND 12" PIERS.
6. REPAIR OR REPLACE FLOOR BEAMS AND JOISTS.
7. INSTALL TEMPORARY FLOORING AND VAPOR BARRIER.

(REFERENCE CENTEX FOUNDATION REPAIR PROPOSAL FOR DETAILS)

N

1 / F1.1 **PHASE 1 FOUNDATION REPAIR**

SCALE: 1/8" = 1'-0"

THE SEAL APPEARING ON THIS DOCUMENT WAS AUTHORIZED BY THOMAS L. PAXSON, P.E. ON 03/08/19. ALTERATION OF A SEALED DOCUMENT WITHOUT PROPER NOTIFICATION TO THE RESPONSIBLE ENGINEER IS AN OFFENSE UNDER THE TEXAS ENGINEERING PRACTICE ACT. TBPE REGISTRATION # F-2731

STATE OF TEXAS
T. L. PAXSON
57556
REGISTERED PROFESSIONAL ENGINEER
3/08/19

NO.	DATE	BY	DESCRIPTION

DRAWN	TLP	03/08/2019	CHECKED	TLP	03/08/2019
APPROVED	TLP	03/08/2019			

Tom Paxson, PE, FNSPE, Pax-Sun Engineering, Inc. 5/11/2019 8:19 PM EXISTING-PHASE-1.dwg

PAXSON ENGINEERING
3930 S. GOTTLI STREET, GEORGETOWN, TX 78626
(512) 863-7762 FAX: (512) 863-7763
(936) 634-8471 FAX: (936) 634-8491
TBPE REGISTRATION # F-2731

PAXSON HISTORIC RESTORATION
1302 SOUTH COLLEGE STREET
GEORGETOWN, TEXAS 78628-7020
FOUNDATION REPAIR AND PORCH REMOVAL

CONTRACT NO. E4117

SHEET NO. **F1.1**

PHASE 1

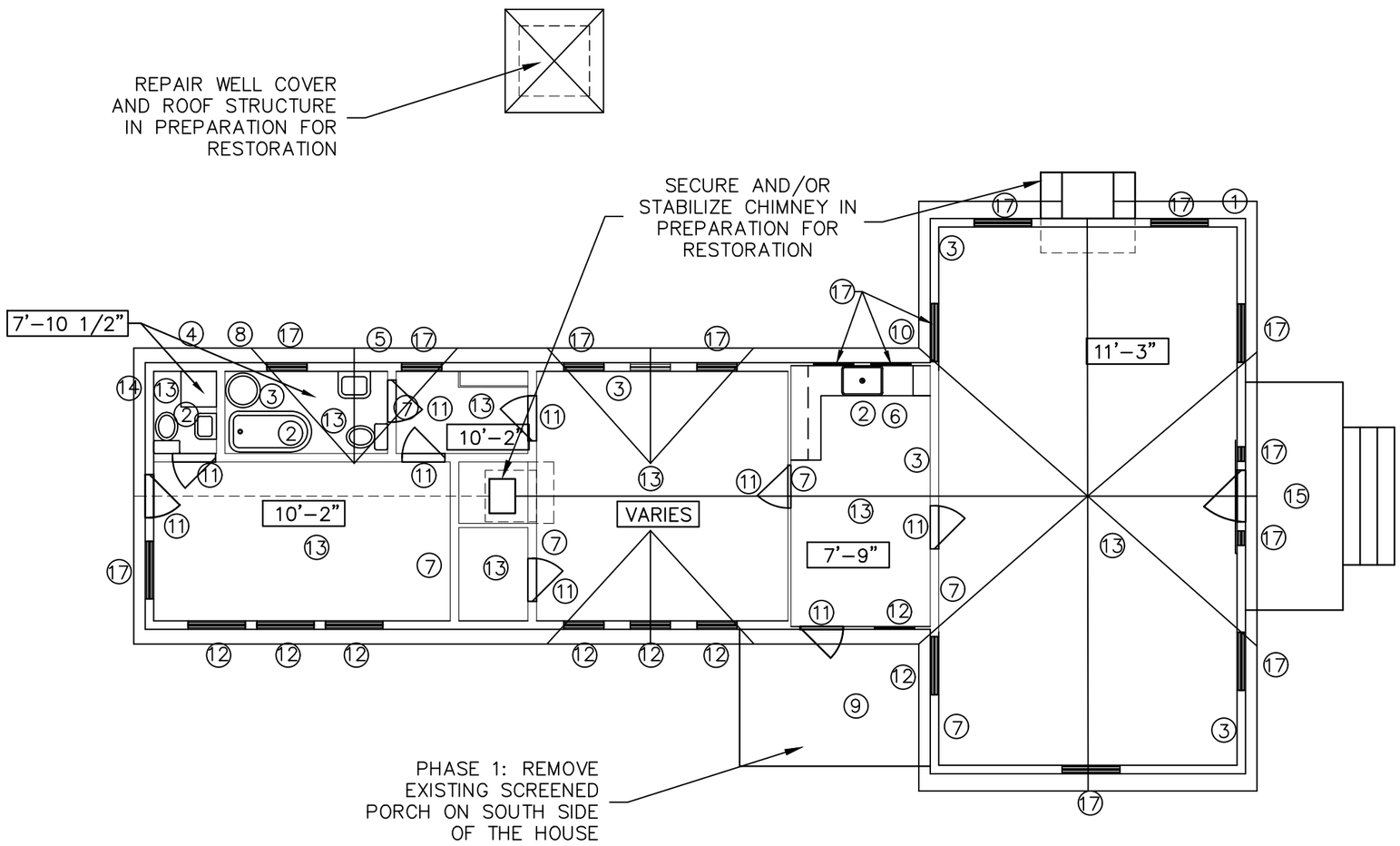

DEMOLITION NOTES:

1. REMOVE METER & PANEL (AFTER NEW SERVICE IS INSTALLED)
2. REMOVE PLUMBING FIXTURES
3. REMOVE GAS PIPE
4. REMOVE FLUE
5. REMOVE DRAIN AND VENT
6. REMOVE KITCHEN CABINETS AND STORE
7. REMOVE WALL
8. REMOVE WATER HEATER
9. REMOVE PORCH
10. REMOVE ANTENNA
11. REMOVE DOOR
12. REMOVE AND STORE WINDOW
13. REMOVE AND STORE WOOD FLOORING
14. REMOVE PLUMBING VENT
15. REMOVE PORCH DECKING AS REQUIRED TO REPAIR FOUNDATION
16. STABILIZE DAMAGED HEARTH
17. SECURE AND RESTORE WINDOW

N

1 D1.1 **FIRST FLOOR DEMOLITION PLAN**

SCALE: 1/8" = 1'-0"

THE SEAL APPEARING ON THIS DOCUMENT WAS AUTHORIZED BY THOMAS L. PAXSON, P.E. ON 03/08/19. ALTERATION OF A SEALED DOCUMENT WITHOUT PROPER NOTIFICATION TO THE RESPONSIBLE ENGINEER IS AN OFFENSE UNDER THE TEXAS ENGINEERING PRACTICE ACT. TBPE REGISTRATION # F-2731

STATE OF TEXAS
T. L. PAXSON
57556
REGISTERED
PROFESSIONAL ENGINEER
3/08/19

NO.	DATE	BY	DESCRIPTION

Tom Paxson, PE, FNSPE, Pax-Sun Engineering, Inc. 5/11/2019 5:38 PM DEMOLITION.dwg

DRAWN	TLP	03/08/2019	CHECKED	TLP	03/08/2019
APPROVED	TLP	03/08/2019			

PAX-SUN ENGINEERING
TBPE REGISTRATION # F-2731

PAXSON HISTORIC RESTORATION
1302 SOUTH COLLEGE STREET
GEORGETOWN, TEXAS 78628-7020
FIRST FLOOR DOMOLITION PLAN

CONTRACT NO. E4117

SHEET NO. D1.1

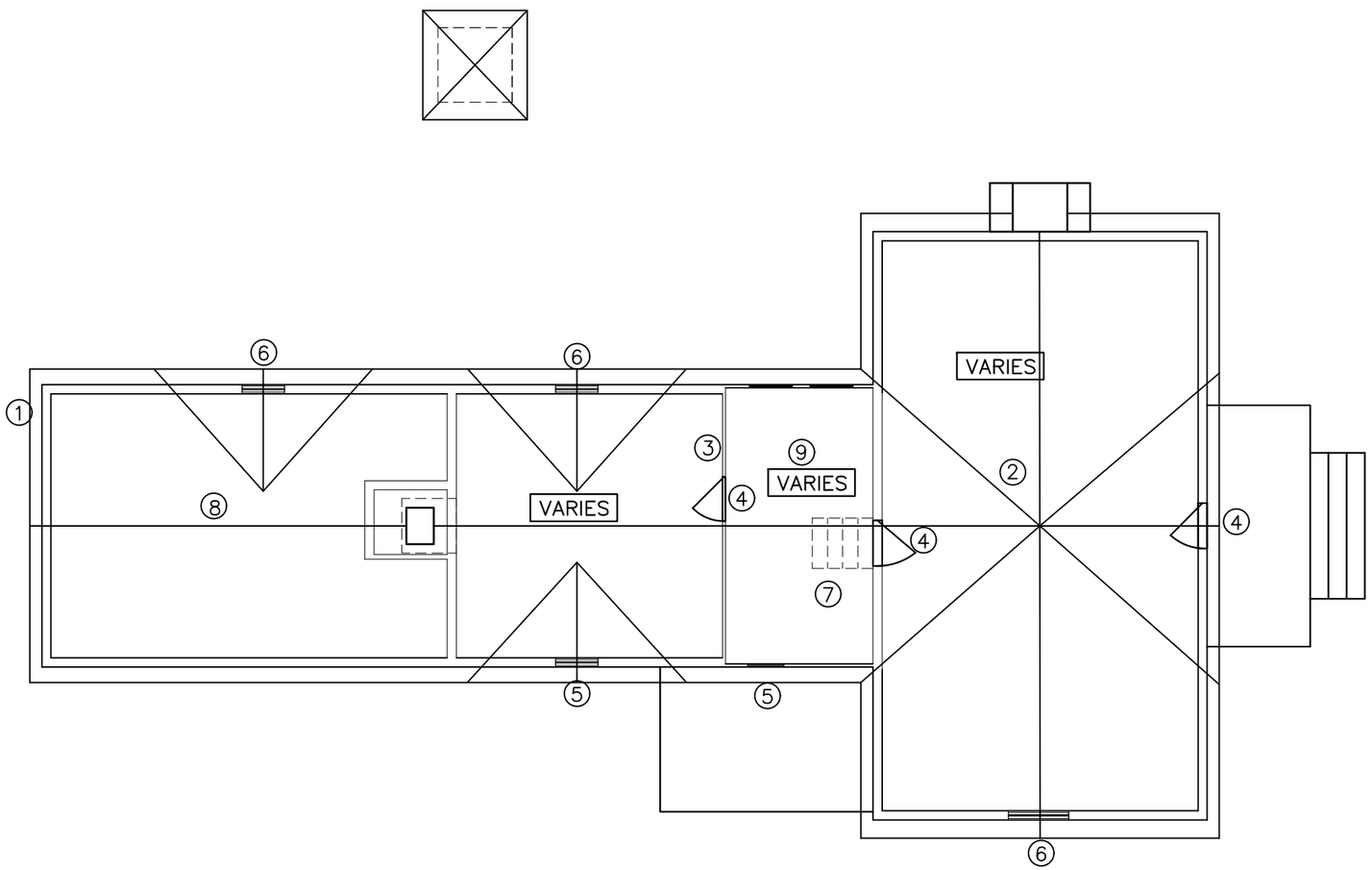

DEMOLITION NOTES:

1. REMOVE PLUMBING VENT
2. REMOVE STORED MATERIAL
3. REMOVE WALL
4. REMOVE & STORE DOOR
5. REMOVE AND STORE WINDOW
6. SECURE AND RESTORE WINDOW
7. REMOVE STAIRS
8. REMOVE AND REPLACE CEILING JOISTS
9. REMOVE EXISTING DECKING & CEILING/FLOOR JOISTS

N

1 / D1.2 **SECOND FLOOR DEMOLITION PLAN**

SCALE: 1/8" = 1'-0"

THE SEAL APPEARING ON THIS DOCUMENT WAS AUTHORIZED BY THOMAS L. PAXSON, P.E. ON 03/08/19. ALTERATION OF A SEALED DOCUMENT WITHOUT PROPER NOTIFICATION TO THE RESPONSIBLE ENGINEER IS AN OFFENSE UNDER THE TEXAS ENGINEERING PRACTICE ACT. TBPE REGISTRATION # F-2731

STATE OF TEXAS
T. L. PAXSON
57556
REGISTERED
PROFESSIONAL ENGINEER
3/08/19

NO.	DATE	BY	DESCRIPTION

Tom Paxson, PE, FNSPE, Pax-Sun Engineering, Inc. 5/11/2019 5:38 PM DEMOLITION.dwg

DRAWN	TLP	DATE	03/08/2019
CHECKED	TLP	DATE	03/08/2019
APPROVED	TLP	DATE	03/08/2019

PAX-SUN ENGINEERING
3930 S. GEORGETOWN ROAD
(830) 634-4671 FAX - (830) 634-4691
TBPE REGISTRATION # F-2731

PAXSON HISTORIC RESTORATION
1302 SOUTH COLLEGE STREET
GEORGETOWN, TEXAS 78628-7020
SECOND FLOOR DEMOLITION PLAN

CONTRACT NO.
E4117

SHEET NO.
D1.2

DEMOLITION NOTES:

1. REMOVE PORCH
2. REMOVE EXISTING COMPOSITION SHINGLES
3. REMOVE EXISTING COMPOSITION SHINGLES, RAFTERS AND DECKING
4. REMOVE ONLY ROOFING MATERIAL TO ALLOW FOR COMPLETE RESTORATION
5. REMOVE PLUMBING VENT
6. REMOVE WATER HEATER FLUE

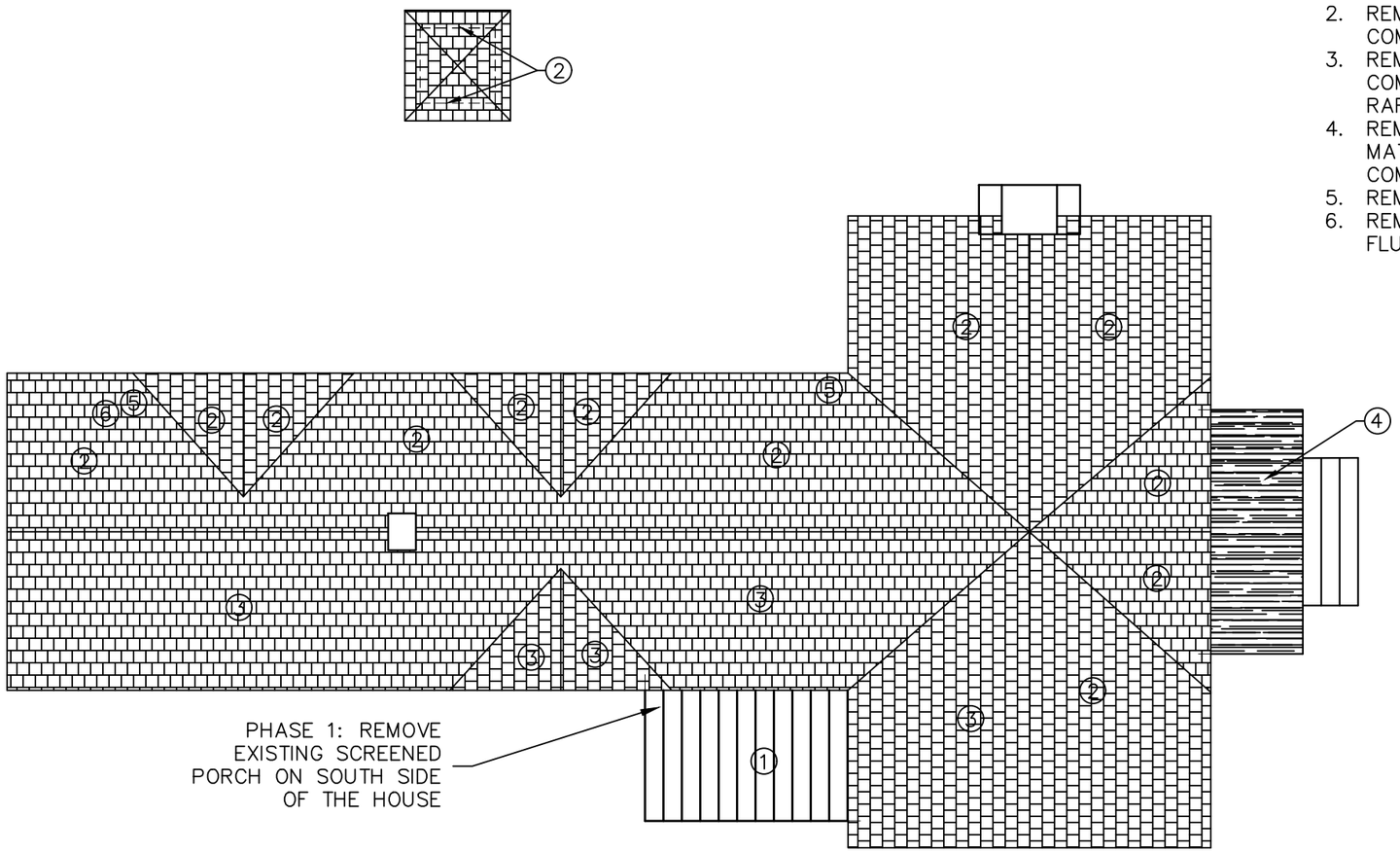

N

1 / D1.3 **ROOF DEMOLITION PLAN**

SCALE: 1/8" = 1'-0"

THE SEAL APPEARING ON THIS DOCUMENT WAS AUTHORIZED BY THOMAS L. PAXSON, P.E. ON 03/08/19. ALTERATION OF A SEALED DOCUMENT WITHOUT PROPER NOTIFICATION TO THE RESPONSIBLE ENGINEER IS AN OFFENSE UNDER THE TEXAS ENGINEERING PRACTICE ACT. TBPE REGISTRATION # F-2731

STATE OF TEXAS
T. L. PAXSON
57556
REGISTERED PROFESSIONAL ENGINEER
3/08/19

NO.	DATE	BY	DESCRIPTION

Tom Paxson, PE, FNSPE, Pax-Sun Engineering, Inc. 5/11/2019 5:38 PM DEMOLITION.dwg

DRAWN	TLP	DATE	03/08/2019		
CHECKED	TLP	DATE	03/08/2019		
APPROVED	TLP	DATE	03/08/2019		

PAXSON ENGINEERING
3930 GEORGETOWN SQUARE #172
(512) 931-2000 FAX: (512) 931-2001
TBPE REGISTRATION # F-2731

PAXSON HISTORIC RESTORATION
1302 SOUTH COLLEGE STREET
GEORGETOWN, TEXAS 78628-7020
ROOF DOMOLITION PLAN

CONTRACT NO. E4117

SHEET NO. D1.3

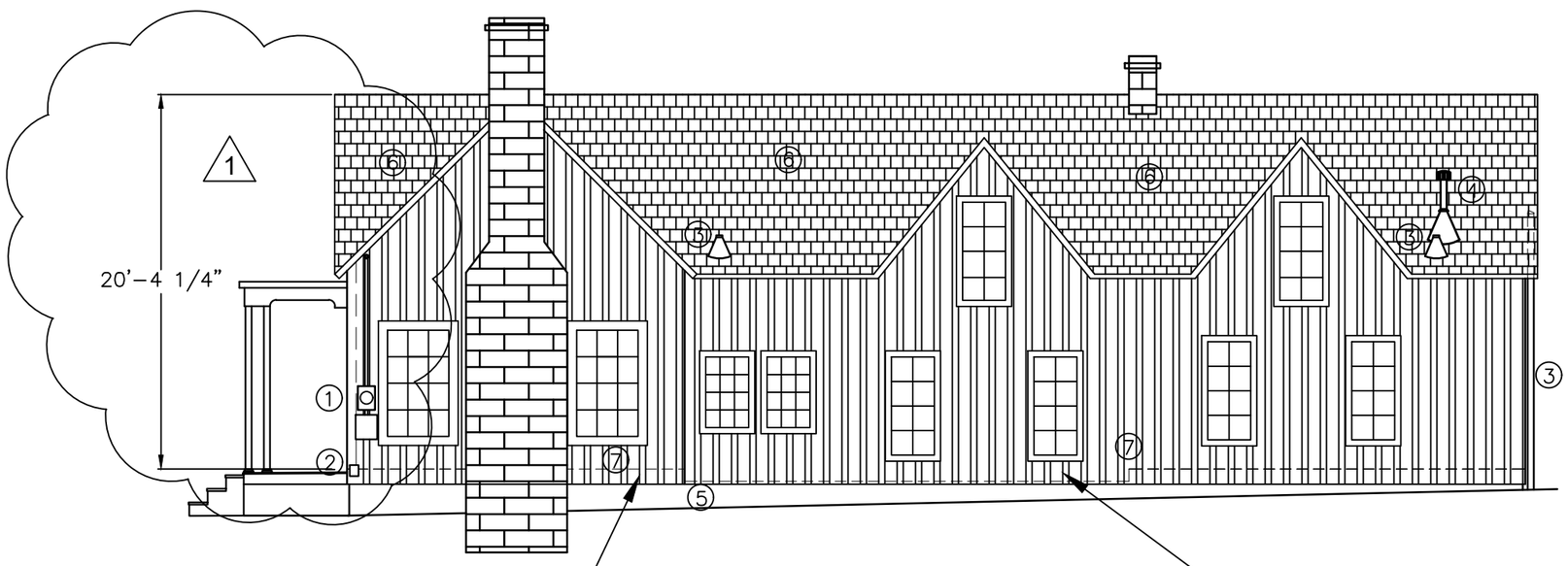

1 / D2.1 **NORTH ELEVATION DEMOLITION**
SCALE: 1/8" = 1'-0"

DEMOLITION NOTES:

1. REMOVE METER (AFTER NEW SERVICE IS INSTALLED)
2. REMOVE TELEPHONE EQUIPMENT
3. REMOVE PLUMBING VENT
4. REMOVE FLUE
5. REMOVE ANTENNA
6. REMOVE EXISTING COMPOSITION SHINGLES
7. REMOVE ROTTEN AND DAMAGED SIDING AND SILLS

1 ADD ESTIMATED RIDGE HEIGHT DIMENSION; TLP PE #57556 05/11/19

THE SEAL APPEARING ON THIS DOCUMENT WAS AUTHORIZED BY THOMAS L. PAXSON, P.E. ON 03/08/19. ALTERATION OF A SEALED DOCUMENT WITHOUT PROPER NOTIFICATION TO THE RESPONSIBLE ENGINEER IS AN OFFENSE UNDER THE TEXAS ENGINEERING PRACTICE ACT. TBPE REGISTRATION # F-2731

STATE OF TEXAS
T. L. PAXSON
57556
REGISTERED PROFESSIONAL ENGINEER
3/08/19

DRAWN	DATE	NO.	DATE	BY	DESCRIPTION
TLP	03/08/2019	1	05/11/19	TLP	RESPONSE TO STAFF NOTES
CHECKED	DATE				
TLP	03/08/2019				
APPROVED	DATE				
TLP	03/08/2019				

Tom Paxson, Pe, PMPE, Pax-Sys Engineering, Inc. 5/11/2019 5:38 PM DEMOLITION.dwg

PAXSYS
393 SOUTH CHESTNUT, LUFKIN, TX 75901
(936) 634-6671 FAX: (936) 634-6691
TBPE REGISTRATION # F-2731

PAXSON HISTORIC RESTORATION
1302 SOUTH COLLEGE STREET
GEORGETOWN, TEXAS 78628-7020
NORTH ELEVATION DEMOLITION

CONTRACT NO.
E4117

SHEET NO.
D2.1

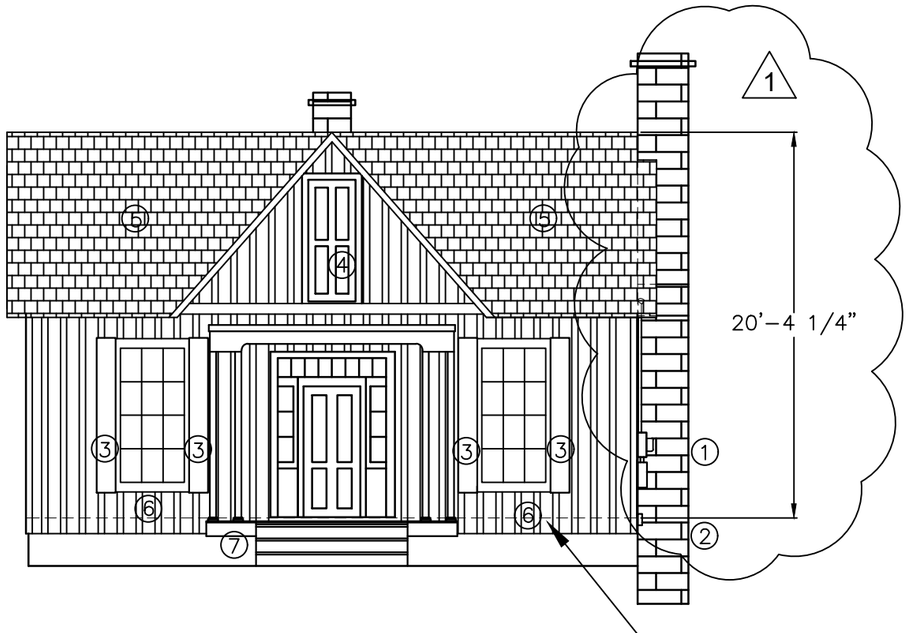

1 / D2.2 **EAST ELEVATION DEMOLITION**
SCALE: 1/8" = 1'-0"

DEMOLITION NOTES:

1. REMOVE METER & PANEL (AFTER NEW SERVICE IS INSTALLED)
2. REMOVE TELEPHONE EQUIPMENT
3. REMOVE NON-HISTORIC SHUTTERS
4. REMOVE DOOR AND STORE
5. REMOVE EXISTING COMPOSITION SHINGLES
6. REMOVE ROTTEN AND DAMAGED SIDING AND SILLS
7. REMOVE AND STORE PORCH DECKING AS REQUIRED TO REPAIR FOUNDATION

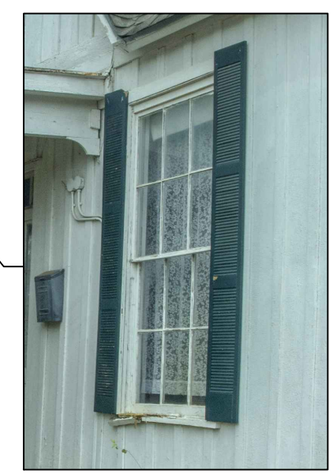

1 ADD ESTIMATED RIDGE HEIGHT DIMENSION; TLP PE #57556 05/11/19

THE SEAL APPEARING ON THIS DOCUMENT WAS AUTHORIZED BY THOMAS L. PAXSON, P.E. ON 03/08/19. ALTERATION OF A SEALED DOCUMENT WITHOUT PROPER NOTIFICATION TO THE RESPONSIBLE ENGINEER IS AN OFFENSE UNDER THE TEXAS ENGINEERING PRACTICE ACT. TBPE REGISTRATION # F-2731

STATE OF TEXAS
T. L. PAXSON
57556
REGISTERED PROFESSIONAL ENGINEER
3/08/19

DRAWN	DATE	NO.	DATE	BY	DESCRIPTION
TLP	03/08/2019	1	05/11/19	TLP	RESPONSE TO STAFF NOTES
CHECKED	DATE				
TLP	03/08/2019				
APPROVED	DATE				
TLP	03/08/2019				

Tom Paxson, Pe, PMP, Pax-Sun Engineering, Inc. 5/11/2019 5:38 PM DEMOLITION.dwg

DAX-SUN ENGINEERING
3953 SOUTH CHESTNUT, LUFKIN, TX 75901
(936) 634-6671 FAX - (936) 634-6691
TBPE REGISTRATION # F-2731

PAXSON HISTORIC RESTORATION
1302 SOUTH COLLEGE STREET
GEORGETOWN, TEXAS 78628-7020
EAST ELEVATION DEMOLITION

CONTRACT NO.
E4117

SHEET NO.
D2.2

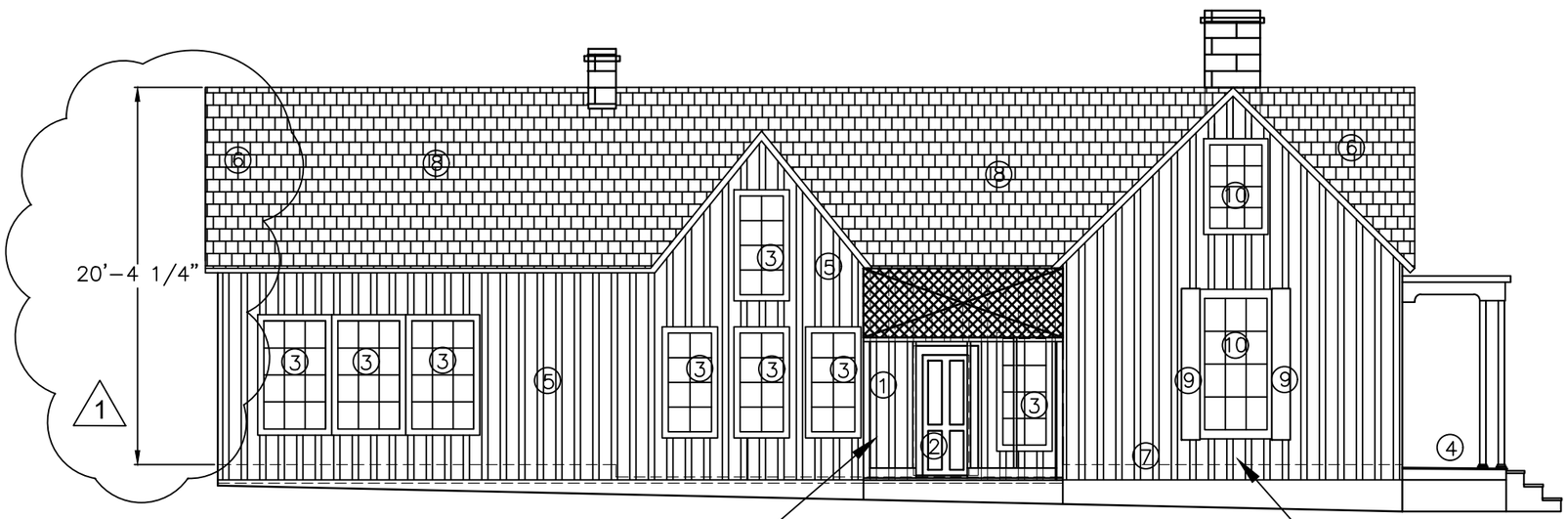

PHASE 1: REMOVE EXISTING SCREENED PORCH ON SOUTH SIDE OF THE HOUSE IN PREPARATION FOR FOUNDATION REPAIR

1 / D2.3 **SOUTH ELEVATION DEMOLITION**
SCALE: 1/8" = 1'-0"

DEMOLITION NOTES:

1. REMOVE SCREENED IN PORCH (PART OF PHASE 1)
2. REMOVE DOOR
3. REMOVE AND STORE WINDOW
4. REMOVE AND STORE PORCH DECKING AS REQUIRED TO REPAIR FOUNDATION
5. REMOVE AND STORE BOARD AND BATTEN SIDING FOR USE IN RESTORING RETAINED SIDING
6. REMOVE EXISTING COMPOSITION SHINGLES
7. REMOVE ROTTEN AND DAMAGED SIDING AND SILLS
8. REMOVE RAFTERS, DECKING & COMPOSITION SHINGLES
9. REMOVE NON-HISTORIC SHUTTERS
10. SECURE WINDOW FOR RESTORATION

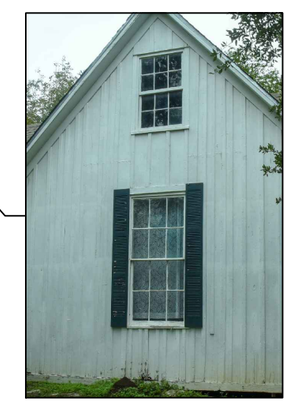

1 ADD ESTIMATED RIDGE HEIGHT DIMENSION; TLP PE #57556 05/11/19

THE SEAL APPEARING ON THIS DOCUMENT WAS AUTHORIZED BY THOMAS L. PAXSON, P.E. ON 03/08/19. ALTERATION OF A SEALED DOCUMENT WITHOUT PROPER NOTIFICATION TO THE RESPONSIBLE ENGINEER IS AN OFFENSE UNDER THE TEXAS ENGINEERING PRACTICE ACT. TBPE REGISTRATION # F-2731

STATE OF TEXAS
T. L. PAXSON
57556
REGISTERED PROFESSIONAL ENGINEER
3/08/19

DRAWN	DATE	NO.	DATE	BY	DESCRIPTION
TLP	03/08/2019	1	05/11/19	TLP	RESPONSE TO STAFF NOTES
CHECKED	DATE				
TLP	03/08/2019				
APPROVED	DATE				
TLP	03/08/2019				

Tom Paxson, PE, PMP, Pax-Sun Engineering, Inc. 5/11/2019 5:38 PM DEMOLITION.dwg

PAX-SUN
2935 SOUTH CHESTNUT, LUFKIN, TX 75901
(936) 634-4671 FAX: (936) 634-6491
TBPE REGISTRATION # F-2731

PAXSON HISTORIC RESTORATION
1302 SOUTH COLLEGE STREET
GEORGETOWN, TEXAS 78628-7020
SOUTH ELEVATION DEMOLITION

CONTRACT NO. E4117

SHEET NO. **D2.3**

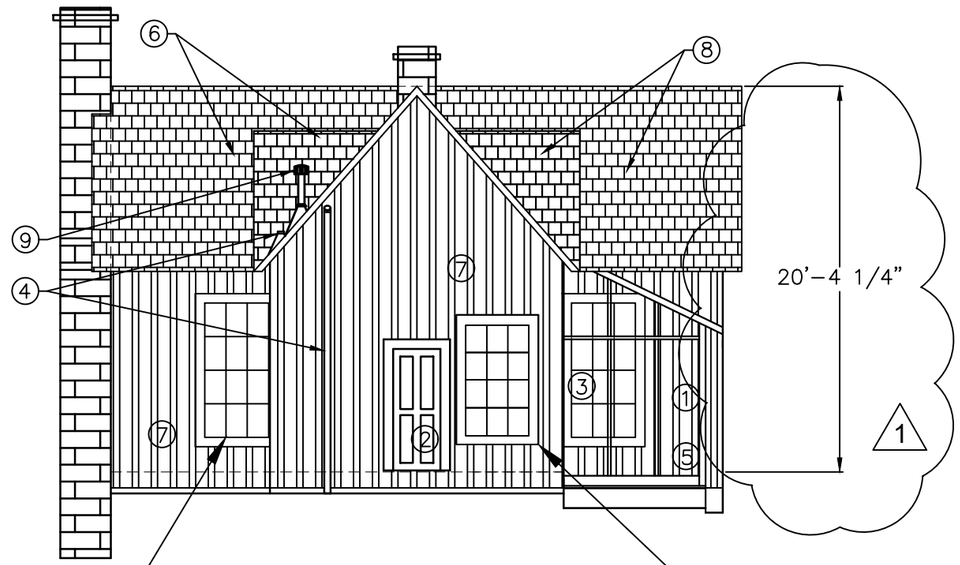

1 / D2.4 **WEST ELEVATION DEMOLITION**
SCALE: 1/8" = 1'-0"

DEMOLITION NOTES:

1. REMOVE SCREENED IN PORCH (PART OF PHASE 1)
2. REMOVE DOOR
3. REMOVE AND STORE WINDOW
4. REMOVE PLUMBING VENT
5. REMOVE AND STORE BOARD AND BATTEN SIDING FOR USE IN RESTORING RETAINED SIDING
6. REMOVE EXISTING COMPOSITION SHINGLES
7. REMOVE ROTTEN AND DAMAGED SIDING AND SILLS
8. REMOVE RAFTERS, DECKING & COMPOSITION SHINGLES
9. REMOVE FLUE

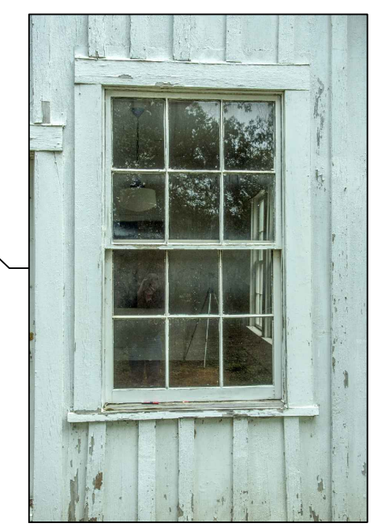

1 ADD ESTIMATED RIDGE HEIGHT DIMENSION; TLP PE #57556 05/11/19

THE SEAL APPEARING ON THIS DOCUMENT WAS AUTHORIZED BY THOMAS L. PAXSON, P.E. ON 03/08/19. ALTERATION OF A SEALED DOCUMENT WITHOUT PROPER NOTIFICATION TO THE RESPONSIBLE ENGINEER IS AN OFFENSE UNDER THE TEXAS ENGINEERING PRACTICE ACT. TBPE REGISTRATION # F-2731

STATE OF TEXAS
T. L. PAXSON
57556
REGISTERED PROFESSIONAL ENGINEER
3/08/19

NO.	DATE	BY	DESCRIPTION
1	05/11/19	TLP	RESPONSE TO STAFF NOTES

	DATE
DRAWN TLP	03/08/2019
CHECKED TLP	03/08/2019
APPROVED TLP	03/08/2019

PAX-SUN
395 SOUTH CHISHOLM, LUFKIN, TX 75901
(936) 634-6471 FAX - (936) 634-6491
TBPE REGISTRATION # F-2731

Tom Paxson, PE, PMP, Pax-Sun Engineering, Inc. 5/11/2019 5:38 PM DEMOLITION.dwg

PAXSON HISTORIC RESTORATION
1302 SOUTH COLLEGE STREET
GEORGETOWN, TEXAS 78628-7020
WEST ELEVATION DEMOLITION

CONTRACT NO. E4117

SHEET NO. D2.4

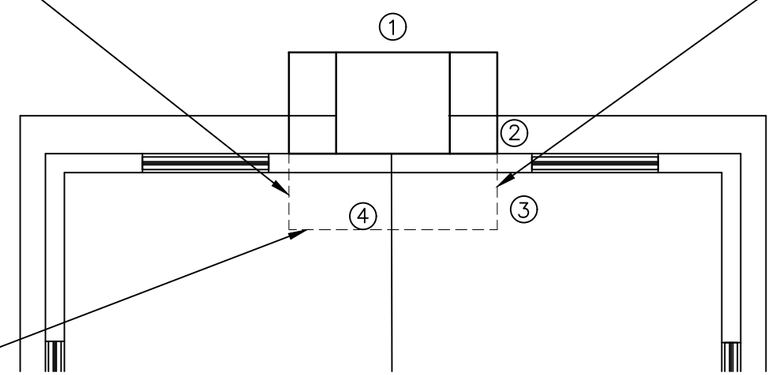

N 1 D3.1 **NORTH FIREPLACE HEARTH DEMOLITION PLAN**
SCALE: 1/4" = 1'-0"

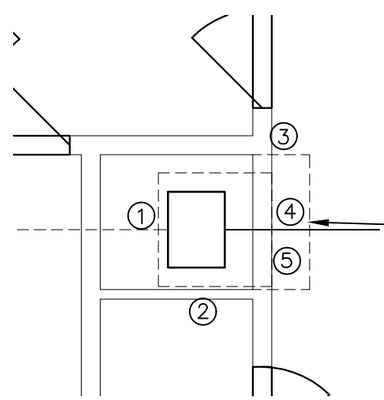

N 2 D3.1 **CENTER FIREPLACE HEARTH DEMOLITION PLAN**
SCALE: 1/4" = 1'-0"

DEMOLITION NOTES:

1. INSPECT CHIMNEY FOR PLUMBNESS, AND INTEGRITY AND REPAIR AS REQUIRED AND IN ACCORDANCE WITH NPS GUIDELINES
2. REMOVE EXISTING FLASHING AND REPLACE WITH COPPER IN ACCORDANCE WITH NPS GUIDELINES
3. REMOVE LOOSE STONES AND REPLACE TO PROVIDE A STABLE FOUNDATION FOR THE HEARTH
4. REMOVE EXISTING HEARTH CAP AND REINSTALL AND ADJUST HEIGHT IN CONJUNCTION WITH THE INSTALLATION OF NEW FLOOR.
5. MODIFY EXISTING FIREPLACE TO RAISE BASE OF FIREBOX TO MATCH NEW FLOOR.

THE SEAL APPEARING ON THIS DOCUMENT WAS AUTHORIZED BY THOMAS L. PAXSON, P.E. ON 03/08/19. ALTERATION OF A SEALED DOCUMENT WITHOUT PROPER NOTIFICATION TO THE RESPONSIBLE ENGINEER IS AN OFFENSE UNDER THE TEXAS ENGINEERING PRACTICE ACT. TBPE REGISTRATION # F-2731

STATE OF TEXAS
T. L. PAXSON
57556
REGISTERED PROFESSIONAL ENGINEER
3/08/19

NO.	DATE	BY	DESCRIPTION

DRAWN	TLP	03/08/2019
CHECKED	TLP	03/08/2019
APPROVED	TLP	03/08/2019

Tom Paxson, PE, FNSPE, Pax-Sun Engineering, Inc. 5/11/2019 5:38 PM DEMOLITION.dwg

PAX-SUN ENGINEERING
3808 SOUTH GRAND AVENUE
GEORGETOWN, TEXAS 78626
(512) 863-6411 FAX: (512) 863-6491
TBPE REGISTRATION # F-2731

PAXSON HISTORIC RESTORATION
1302 SOUTH COLLEGE STREET
GEORGETOWN, TEXAS 78628-7020
FIREPLACE DOMOLITION DETAIL PLANS

CONTRACT NO.
E4117

SHEET NO.
D3.1

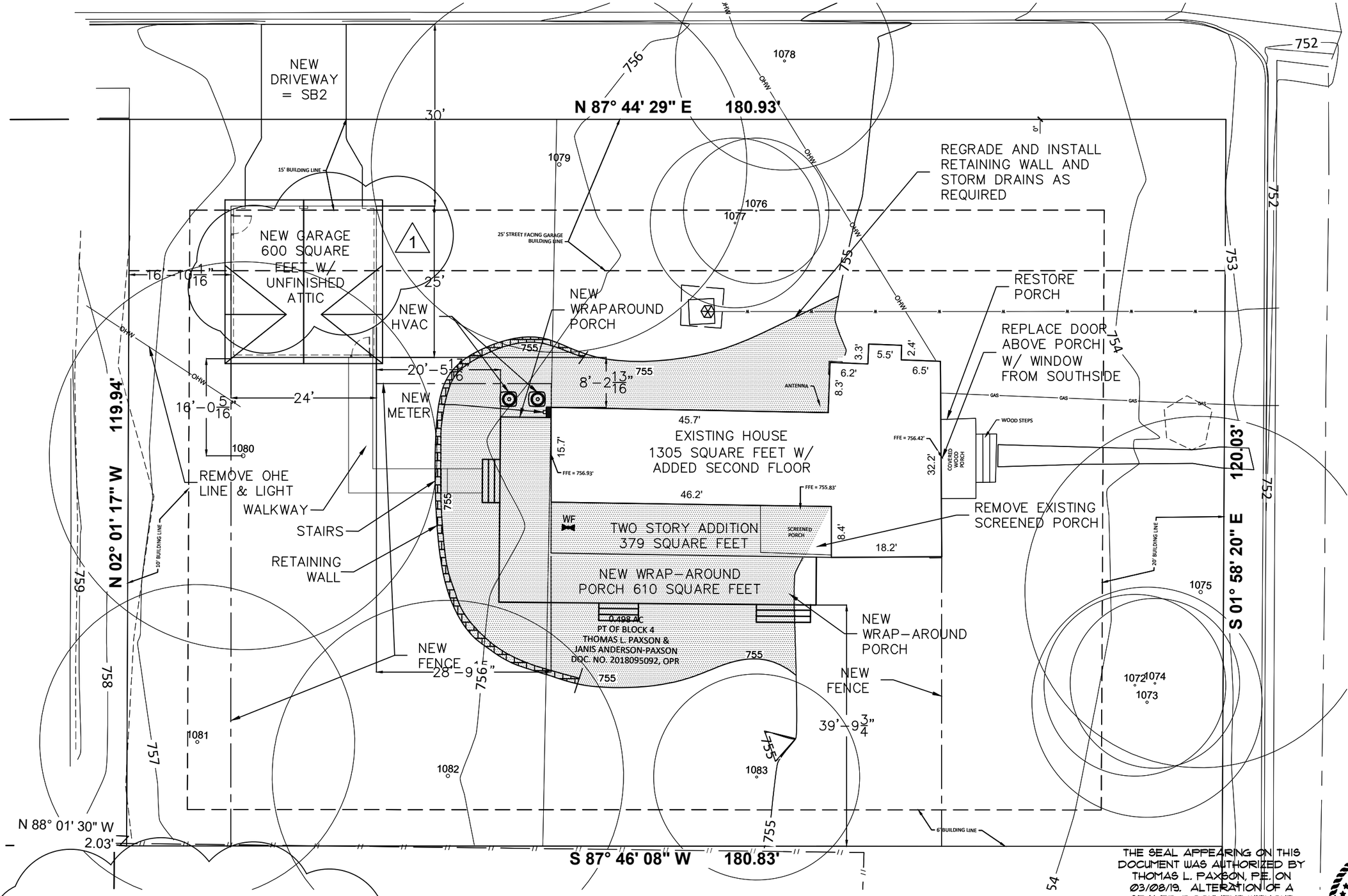

GARAGE AREA / BACK YARD AREA	=	600 SQ. FT. / 8,347 SQ. FT.	= 7.2 % 1
IMPERMEABLE AREA / LOT AREA	=	3,979 SQ. FT. / 21,698 SQ. FT.	= 18.34 %

N

1 / CS1.2 **RESTORED SITE PLAN**

SCALE: 1/16" = 1'-0"

THE SEAL APPEARING ON THIS DOCUMENT WAS AUTHORIZED BY THOMAS L. PAXSON, P.E. ON 03/08/19. ALTERATION OF A SEALED DOCUMENT WITHOUT PROPER NOTIFICATION TO THE RESPONSIBLE ENGINEER IS AN OFFENSE UNDER THE TEXAS ENGINEERING PRACTICE ACT. TBPE REGISTRATION # F-2731

STATE OF TEXAS
T. L. PAXSON
57556
REGISTERED PROFESSIONAL ENGINEER
3/08/19

1 MODIFY AREA RATIO CALCULATION & GARAGE DESCRIPTION TLP PE #57556 05/11/19

NO.	DATE	BY	DESCRIPTION
1	05/11/19	TLP	RESPONSE TO STAFF NOTES

DRAWN	TLP	03/08/2019
CHECKED	TLP	03/08/2019
APPROVED	TLP	03/08/2019

Tom Paxson, PE, FNSPE, Pax-Sun Engineering, Inc. 5/11/2019 4:30 PM RESTORED.dwg

PAX-SUN ENGINEERING, INC.
3930 S. GEORGE WASHINGTON BLVD.
(936) 634-8611 FAX - (936) 634-8691
TBPE REGISTRATION # F-2731

PAXSON HISTORIC RESTORATION
1302 SOUTH COLLEGE STREET
GEORGETOWN, TEXAS 78628-7020
RESTORED SITE PLAN

CONTRACT NO. E4117

SHEET NO. CS1.2

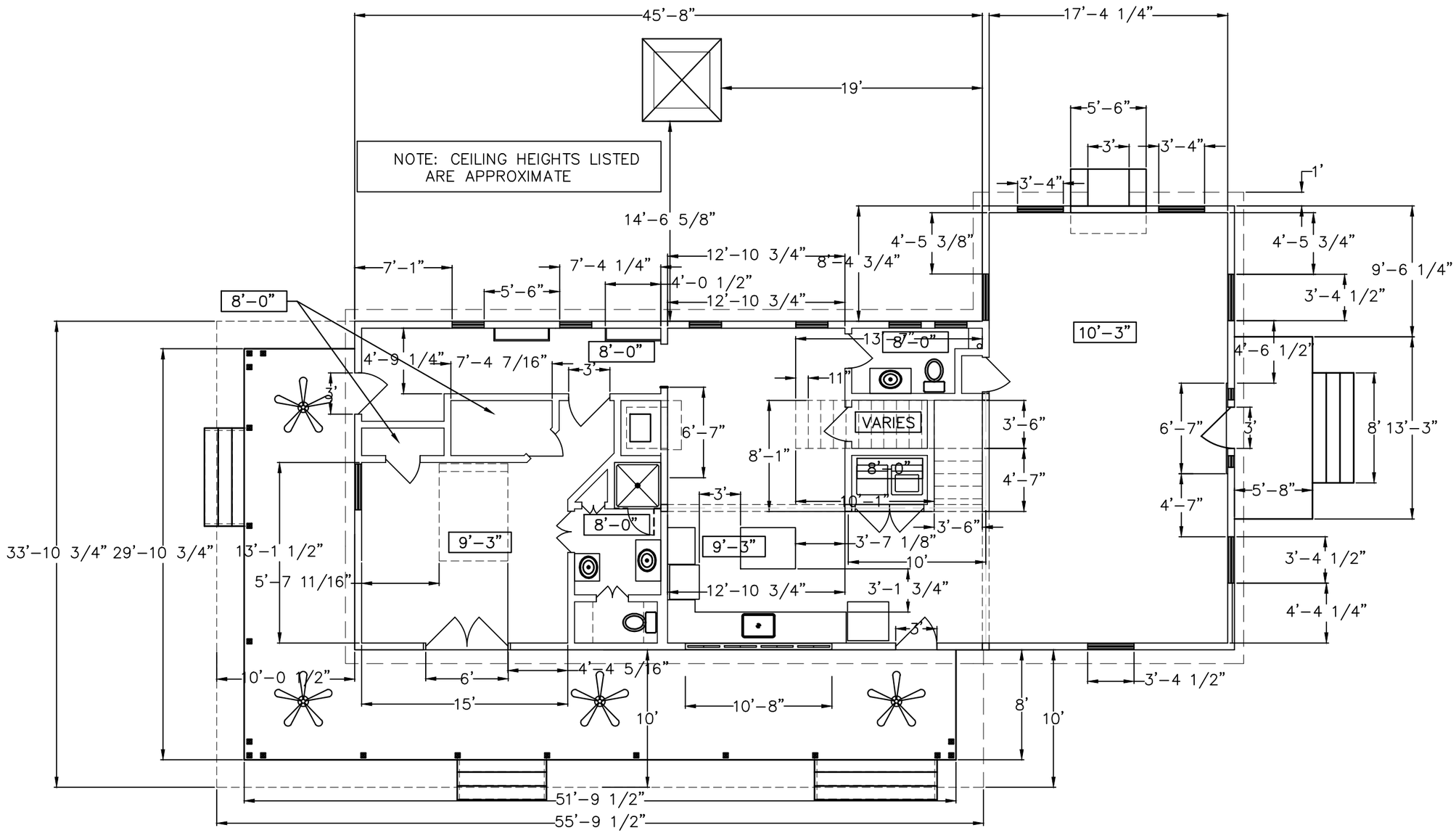

N

1 A1.1 **RESTORED FIRST FLOOR PLAN**

SCALE: 1/8" = 1'-0"

THE SEAL APPEARING ON THIS DOCUMENT WAS AUTHORIZED BY THOMAS L. PAXSON, P.E. ON 03/08/19. ALTERATION OF A SEALED DOCUMENT WITHOUT PROPER NOTIFICATION TO THE RESPONSIBLE ENGINEER IS AN OFFENSE UNDER THE TEXAS ENGINEERING PRACTICE ACT. TBPE REGISTRATION # F-2731

STATE OF TEXAS
T. L. PAXSON
57556
REGISTERED PROFESSIONAL ENGINEER
3/08/19

NO.	DATE	BY	DESCRIPTION

DRAWN	TLP	CHECKED	TLP	APPROVED	TLP
DATE	03/08/2019	DATE	03/08/2019	DATE	03/08/2019

Tom Paxson, PE, PMP, Pax-Sun Engineering, Inc. 5/11/2019 4:30 PM RESTORED.dwg

PAX-SUN
395 SOUTH CREEKNUT, LUFKIN, TX 75901
(936) 634-6491 FAX - (936) 634-6491
TBPE REGISTRATION F-2731

PAXSON HISTORIC RESTORATION
1302 SOUTH COLLEGE STREET
GEORGETOWN, TEXAS 78628-7020
RESTORED FIRST FLOOR PLAN

CONTRACT NO.
E4117

SHEET NO.
A1.1

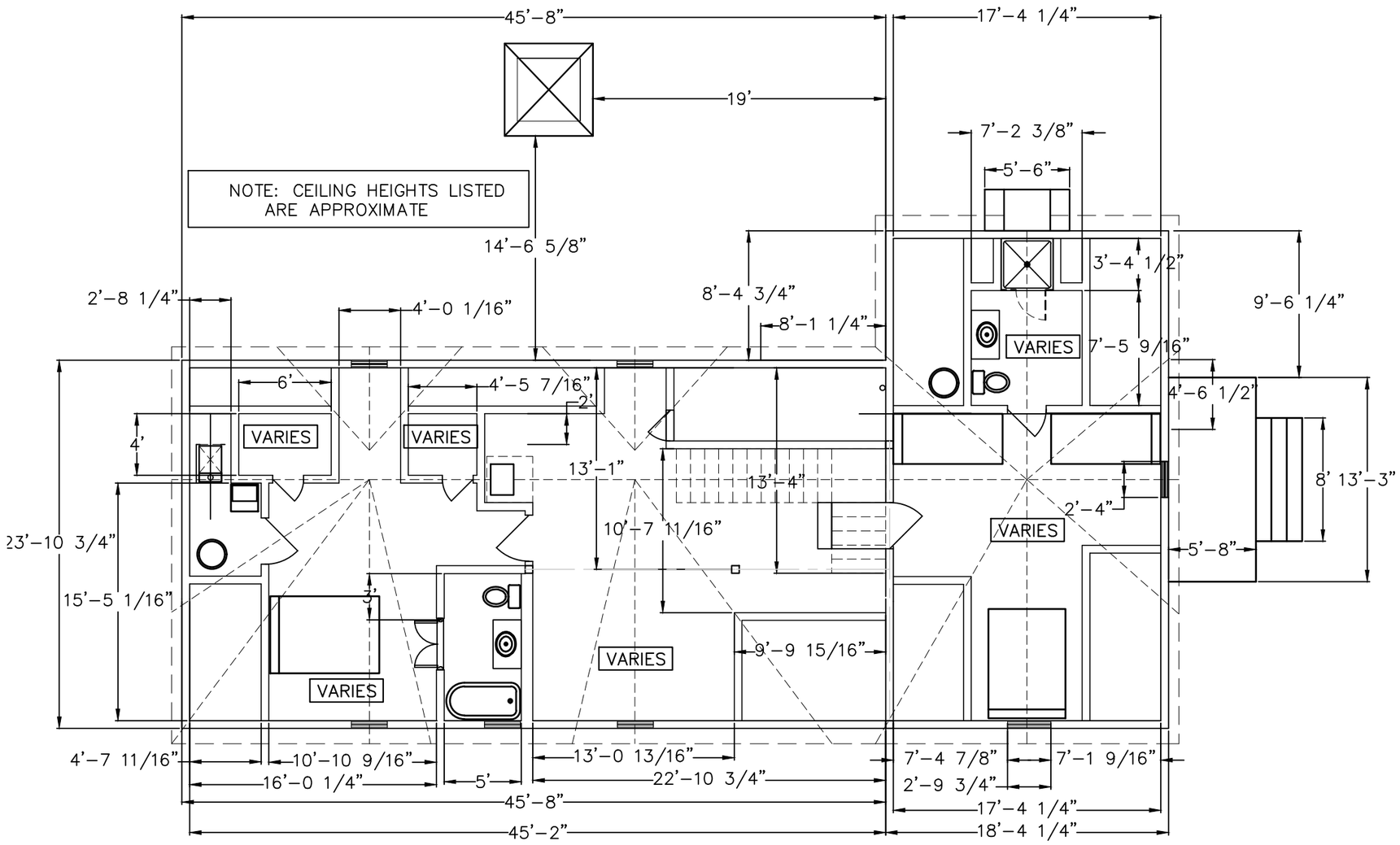

1 A1.2 RESTORED SECOND FLOOR PLAN

SCALE: 1/8" = 1'-0"

THE SEAL APPEARING ON THIS DOCUMENT WAS AUTHORIZED BY THOMAS L. PAXSON, P.E. ON 03/08/19. ALTERATION OF A SEALED DOCUMENT WITHOUT PROPER NOTIFICATION TO THE RESPONSIBLE ENGINEER IS AN OFFENSE UNDER THE TEXAS ENGINEERING PRACTICE ACT. TBPE REGISTRATION # F-2731

STATE OF TEXAS
T. L. PAXSON
57556
REGISTERED PROFESSIONAL ENGINEER
3/08/19

NO.	DATE	BY	DESCRIPTION

DRAWN	TLP	03/08/2019	CHECKED	TLP	03/08/2019
APPROVED	TLP	03/08/2019			

Tom Paxson, Pe, PMP, Pax-Sun Engineering, Inc. 5/11/2019 4:30 PM RESTORED.dwg

PAX-SUN
395 SOUTH CHISHOLM, LIPON, TX 76461
(936) 634-6471 FAX - (936) 634-6491
TBPE REGISTRATION F-2731

PAXSON HISTORIC RESTORATION
1302 SOUTH COLLEGE STREET
GEORGETOWN, TEXAS 78628-7020
RESTORED SECOND FLOOR PLAN

CONTRACT NO. E4117

SHEET NO. A1.2

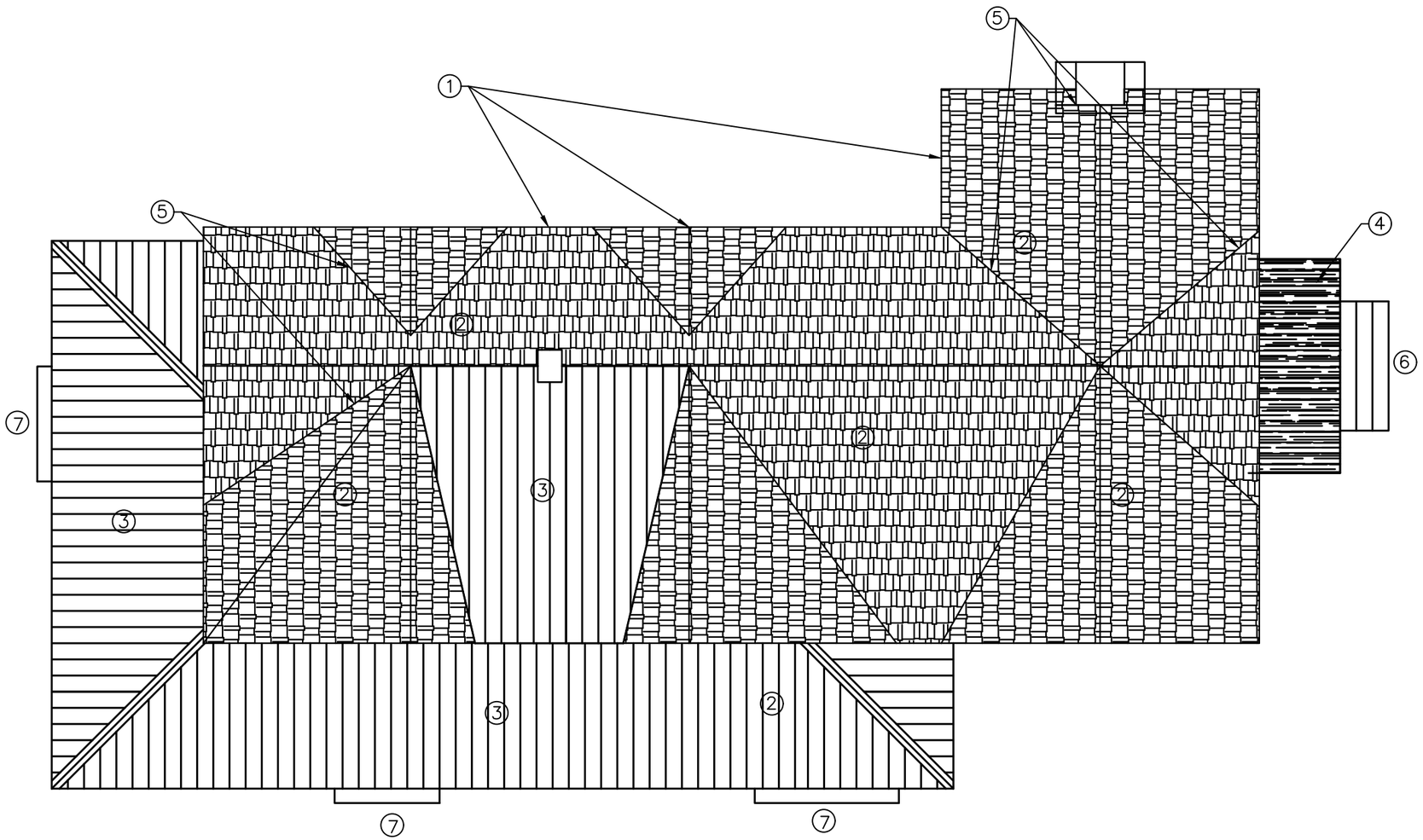

N

1 A1.3 **RESTORED ROOF PLAN**
SCALE: 1/8" = 1'-0"

RESTORATION NOTES:

1. NEW CEDAR SHAKE ROOF OVER DECKING WITH RADIANT BARRIER, MOISTURE BARRIER AND SLATS
2. R-19 FIBERGLAS BAT INSULATION AT ROOF
3. NEW ARCHITECTURAL GALVALUME STANDING SEAM ROOF OVER DECKING WITH RADIANT BARRIER & MOISTURE BARRIER
4. REMOVE AND REPLACE THE EXISTING BUILT UP ROOF AND FLASHING IN ACCORDANCE WITH NPS GUIDELINES
5. INSTALL COPPER FLASHING AT VALLEYS AND CHIMNEYS
6. RESTORE EXISTING STAIRS IN ACCORDANCE WITH NPS GUIDELINES.
7. NEW PORCH STAIRS

THE SEAL APPEARING ON THIS DOCUMENT WAS AUTHORIZED BY THOMAS L. PAXSON, P.E. ON 03/08/19. ALTERATION OF A SEALED DOCUMENT WITHOUT PROPER NOTIFICATION TO THE RESPONSIBLE ENGINEER IS AN OFFENSE UNDER THE TEXAS ENGINEERING PRACTICE ACT. TBPE REGISTRATION # F-2731

STATE OF TEXAS
T. L. PAXSON
57556
REGISTERED PROFESSIONAL ENGINEER
3/08/19

NO.	DATE	BY	DESCRIPTION

DRAWN	TLP	03/08/2019
CHECKED	TLP	03/08/2019
APPROVED	TLP	03/08/2019

DATE

PAX-SON ENGINEERING, INC.
2935 SOUTH CHESTNUT, LUFKIN, TX 75901
(936) 634-4671 FAX: (936) 634-6491
TBPE REGISTRATION # F-2731

Tom Paxson, Pe, PMP, Pax-Son Engineering, Inc. 5/11/2019 4:30 PM RESTORED.dwg

PAXSON HISTORIC RESTORATION
1302 SOUTH COLLEGE STREET
GEORGETOWN, TEXAS 78628-7020
RESTORED ROOF PLAN

CONTRACT NO.
E4117

SHEET NO.
A1.3

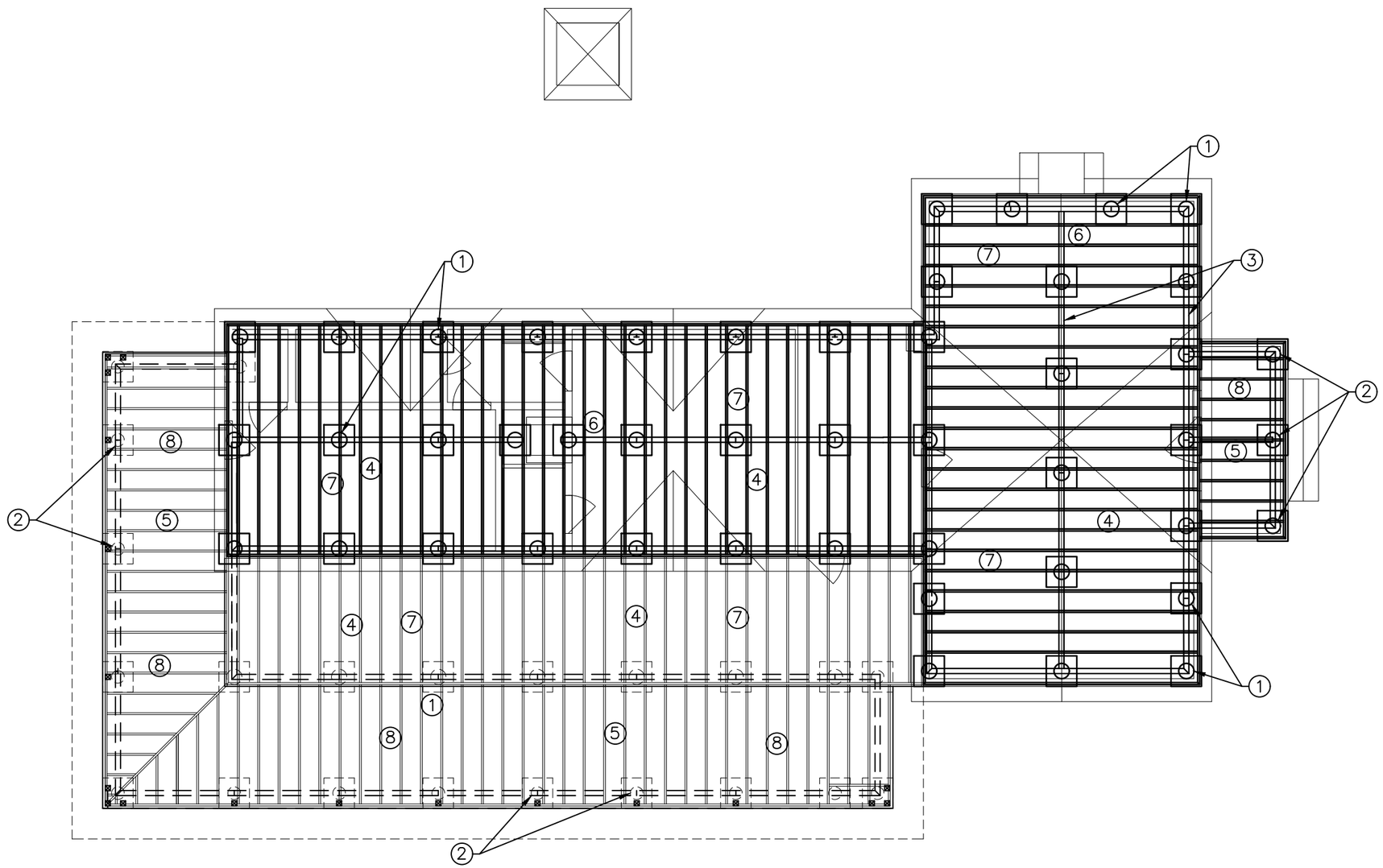

RESTORATION NOTES:

1. NEW 24"X24" PAD WITH 12"ø PIER (TYPICAL)
2. NEW 24"X24" PAD WITH 10"ø PIER (TYPICAL)
3. NEW 4"X6" TIMBER (TYPICAL)
4. NEW 2"X8" FLOOR JOISTS
5. NEW 2"X6" PORCH TREATED FLOOR JOISTS
6. REPAIR FIRE PLACE HEARTH FOUNDATION
7. 3/4" SUB-FLOOR OVER R-30 INSULATION
8. TREATED 3/4" SUB-FLOOR WITH MOISTURE BARRIER

N

1 A1.4 **RESTORED FOUNDATION PLAN**

SCALE: 1/8" = 1'-0"

THE SEAL APPEARING ON THIS DOCUMENT WAS AUTHORIZED BY THOMAS L. PAXSON, P.E. ON 03/08/19. ALTERATION OF A SEALED DOCUMENT WITHOUT PROPER NOTIFICATION TO THE RESPONSIBLE ENGINEER IS AN OFFENSE UNDER THE TEXAS ENGINEERING PRACTICE ACT. TBPE REGISTRATION # F-2731

STATE OF TEXAS
T. L. PAXSON
57556
REGISTERED PROFESSIONAL ENGINEER
3/08/19

NO.	DATE	BY	DESCRIPTION

DRAWN	TLP	DATE	03/08/2019
CHECKED	TLP	DATE	03/08/2019
APPROVED	TLP	DATE	03/08/2019

Tom Paxson, Pe, PMP, Pmc-Sm Engineering, Inc. 5/11/2019 4:30 PM RESTORED.dwg

PAXSON ENGINEERING
2810 SOUTH CHESTNUT, LUFKIN, TX 75901
(936) 634-6671 FAX - (936) 634-6691
TBPE REGISTRATION # F-2731

PAXSON HISTORIC RESTORATION
1302 SOUTH COLLEGE STREET
GEORGETOWN, TEXAS 78628-7020
RESTORED FOUNDATION PLAN

CONTRACT NO. E4117

SHEET NO. **A1.4**

NOTE

NEW ROOF HEIGHT REMAINS UNCHANGED EXCEPT FOR MINOR ADJUSTMENT RESULTING FROM LEVELING THE HOUSE. REFERENCE DEMOLITION DRAWINGS D2.* FOR CONDITIONS PRIOR TO RENOVATION

1

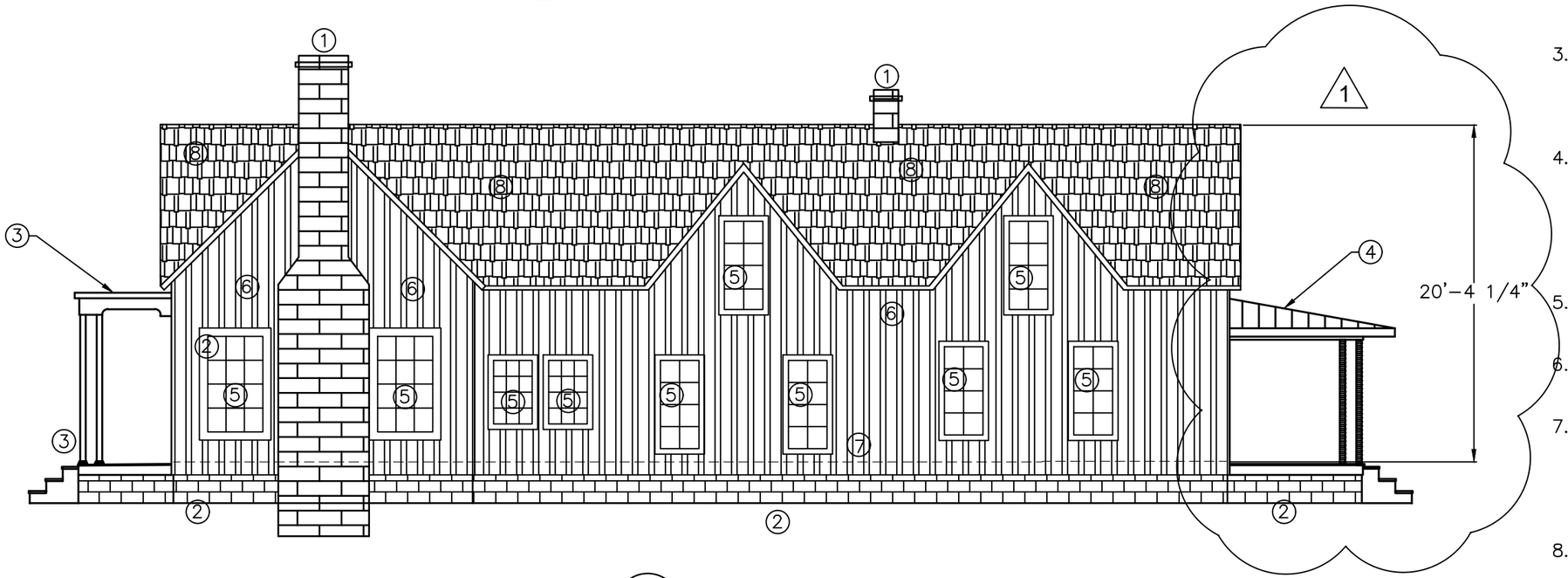

1 / A2.1 **RESTORED NORTH ELEVATION**

SCALE: 1/8" = 1'-0"

RESTORATION NOTES:

1. CLEAN, REPOINT & REFLASH EXISTING CHIMNEY TO RESTORE IN ACCORDANCE WITH NPS GUIDELINES
2. NEW LIMESTONE SKIRTING WITH VENTS IN ACCORDANCE WITH NPS GUIDELINES
3. RESTORE EXISTING PORCH INCLUDING STAIRS, FLOOR, ROOF AND TRIM IN ACCORDANCE WITH NPS GUIDELINES.
4. NEW PORCH WITH ARCHITECTURAL GALVALUME STANDING SEAM ROOF AND WOODEN DECK, STAIRS, POSTS AND TRIM IN ACCORDANCE WITH NPS GUIDELINES
5. RESTORE HISTORIC WINDOWS IN ACCORDANCE WITH NPS GUIDELINES
6. INSTALL R-13 FIBERGLAS BATT INSULATION IN EXISTING WALLS
7. RESTORE THE EXISTING BOARD AND BATTEN SIDING USING MATERIALS FROM SOUTH SIDE AND PAINT IN ACCOREANCE WITH NPS STANDARDS
8. NEW CEDAR SHAKE SHINGLES OVER DECK, SLATS, MOISTURE BARRIER AND R19 MINIMUM INSULATION

1 ADD NOTE AND ESTIMATED RIDGE HEIGHT DIMENSION; TLP PE #57556 05/11/19

THE SEAL APPEARING ON THIS DOCUMENT WAS AUTHORIZED BY THOMAS L. PAXSON, P.E. ON 03/08/19. ALTERATION OF A SEALED DOCUMENT WITHOUT PROPER NOTIFICATION TO THE RESPONSIBLE ENGINEER IS AN OFFENSE UNDER THE TEXAS ENGINEERING PRACTICE ACT. TBPE REGISTRATION # F-2731

STATE OF TEXAS
T. L. PAXSON
57556
REGISTERED PROFESSIONAL ENGINEER
3/08/19

NO.	DATE	BY	DESCRIPTION
1	05/11/19	TLP	RESPONSE TO STAFF NOTES

DRAWN	TLP	DATE	03/08/2019
CHECKED		DATE	03/08/2019
APPROVED	TLP	DATE	03/08/2019

Tom Paxson, Pe, PMP, Pmc-Sm Engineering, Inc. 5/11/2019 4:30 PM RESTORED.dwg

PAXSON ENGINEERING, INC.
2935 SOUTH CHESTNUT, LUFKIN, TX 75901
(936) 634-4671 FAX: (936) 634-4691
TBPE REGISTRATION # F-2731

PAXSON HISTORIC RESTORATION
1302 SOUTH COLLEGE STREET
GEORGETOWN, TEXAS 78628-7020
RESTORED NORTH ELEVATION

CONTRACT NO. E4117

SHEET NO. **A2.1**

NOTE

NEW ROOF HEIGHT REMAINS UNCHANGED EXCEPT FOR MINOR ADJUSTMENT RESULTING FROM LEVELING THE HOUSE. REFERENCE DEMOLITION DRAWINGS D2.* FOR CONDITIONS PRIOR TO RENOVATION

1

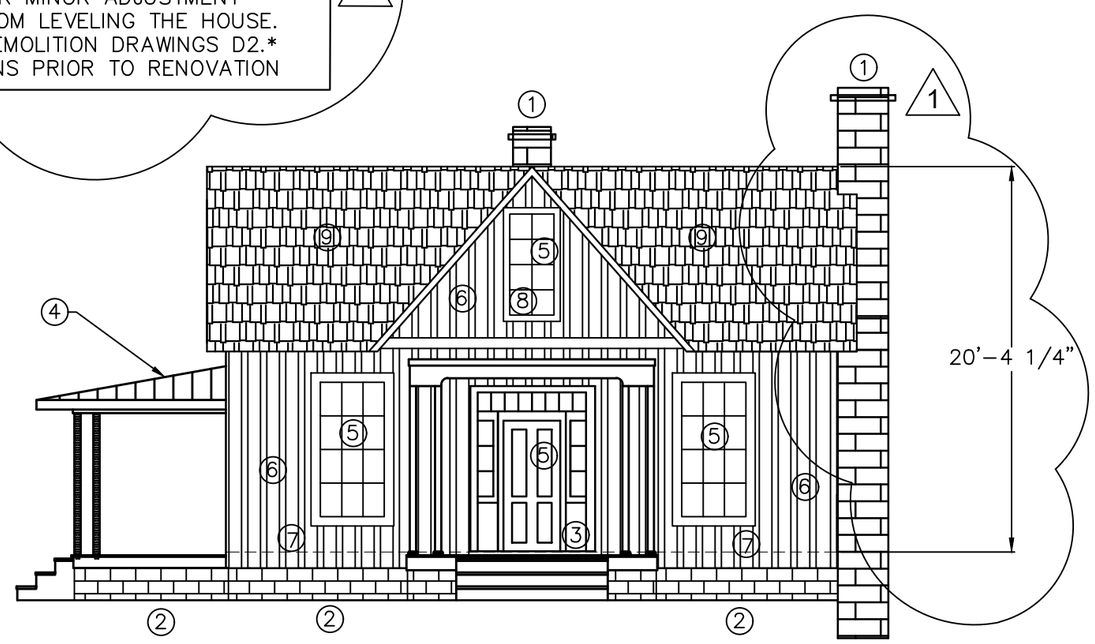

1 / A2.2 **RESTORED EAST ELEVATION**

SCALE: 1/8" = 1'-0"

RESTORATION NOTES:

1. CLEAN, REPOINT & REFLASH EXISTING CHIMNEY TO RESTORE IN ACCORDANCE WITH NPS GUIDELINES
2. NEW LIMESTONE SKIRTING WITH VENTS IN ACCORDANCE WITH NPS GUIDELINES
3. RESTORE EXISTING PORCH INCLUDING STAIRS, ROOF, FLOOR AND TRIM IN ACCORDANCE WITH NPS GUIDELINES.
4. NEW PORCH WITH ARCHITECTURAL GALVALUME STANDING SEAM ROOF AND WOODEN DECK, POSTS, STAIRS AND TRIM IN ACCORDANCE WITH NPS GUIDELINES
5. RESTORE HISTORIC WINDOWS AND ENTRY DOOR ASSEMBLY IN ACCORDANCE WITH NPS GUIDELINES
6. INSTALL R-13 FIBERGLAS BATT INSULATION IN EXISTING WALLS
7. RESTORE THE EXISTING BOARD AND BATTEN SIDING USING MATERIALS FROM SOUTH SIDE AND PAINT IN ACCOREANCE WITH NPS STANDARDS
8. INSTALL NEW WINDOW (REMOVED FROM SOUTH SIDE) AFTER REMOVAL OF EXISTING DOOR
9. NEW CEDAR SHAKE SHINGLES OVER DECK, SLATS, MOISTURE BARRIER AND R19 MINIMUM INSULATION

1 ADD NOTE AND ESTIMATED RIDGE HEIGHT DIMENSION; TLP PE #57556 05/11/19

THE SEAL APPEARING ON THIS DOCUMENT WAS AUTHORIZED BY THOMAS L. PAXSON, P.E. ON 03/08/19. ALTERATION OF A SEALED DOCUMENT WITHOUT PROPER NOTIFICATION TO THE RESPONSIBLE ENGINEER IS AN OFFENSE UNDER THE TEXAS ENGINEERING PRACTICE ACT. TBPE REGISTRATION # F-2731

STATE OF TEXAS
T. L. PAXSON
57556
REGISTERED PROFESSIONAL ENGINEER
3/08/19

NO.	DATE	BY	DESCRIPTION
1	05/11/19	TLP	RESPONSE TO STAFF NOTES

DRAWN	TLP	DATE	03/08/2019	Tom Paxson, PE, PMP, Pax-Sun Engineering, Inc.	5/11/2019 4:30 PM RESTORED.dwg
CHECKED	TLP	DATE	03/08/2019		
APPROVED	TLP	DATE	03/08/2019		

PAX-SUN
395 SOUTH CHISHOLM, LUFKIN, TX 75901
(936) 634-6491 FAX - (936) 634-6491
TBPE REGISTRATION F-2731

PAXSON HISTORIC RESTORATION
1302 SOUTH COLLEGE STREET
GEORGETOWN, TEXAS 78628-7020
RESTORED EAST ELEVATION

CONTRACT NO. E4117

SHEET NO. A2.2

NOTE

NEW ROOF HEIGHT REMAINS UNCHANGED EXCEPT FOR MINOR ADJUSTMENT RESULTING FROM LEVELING THE HOUSE. REFERENCE DEMOLITION DRAWINGS D2.* FOR CONDITIONS PRIOR TO RENOVATION

1

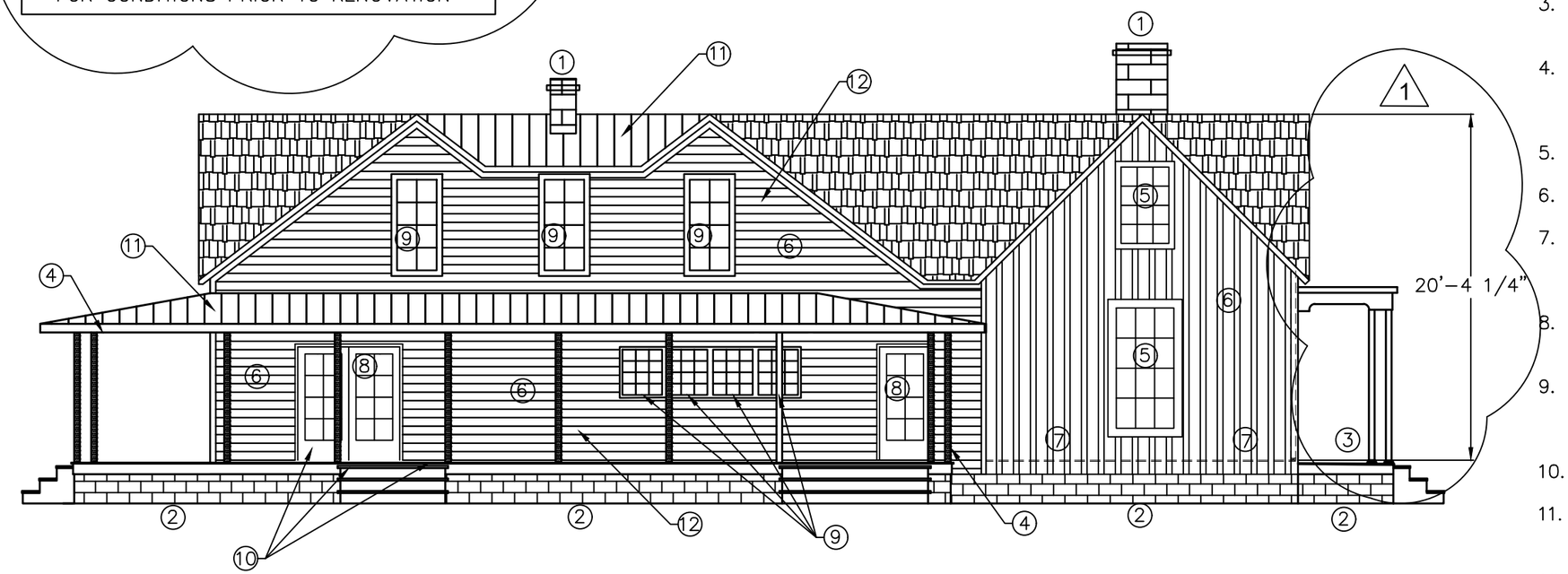

RESTORATION NOTES:

1. CLEAN, REPOINT & REFLASH EXISTING CHIMNEY TO RESTORE IN ACCORDANCE WITH NPS GUIDELINES
2. NEW LIMESTONE SKIRTING WITH VENTS IN ACCORDANCE WITH NPS GUIDELINES
3. RESTORE EXISTING PORCH INCLUDING STAIRS IN ACCORDANCE WITH NPS GUIDELINES.
4. NEW PORCH WITH ARCHITECTURAL GALVALUME STANDING SEAM ROOF AND WOODEN DECK, POSTS, STAIRS AND TRIM IN ACCORDANCE WITH NPS GUIDELINES
5. RESTORE HISTORIC WINDOWS IN ACCORDANCE WITH NPS GUIDELINES
6. INSTALL R-13 FIBERGLAS BATT INSULATION IN NEW AND EXISTING WALLS
7. RESTORE THE EXISTING BOARD AND BATTEN SIDING USING MATERIALS FROM SOUTH SIDE AND PAINT IN ACCORDANCE WITH NPS GUIDELINES
8. NEW WOOD PATIO DOOR EQUAL TO PELLA ARCHITECT SERIES TRADITIONAL 850 WITH ILT GRILLE PATTERN
9. NEW SINGLE HUNG WOOD WINDOW EQUAL TO PELLA ARCHITECT SERIES TRADITIONAL 850 WITH ILT GRILLE PATTERN
10. PORCH DECK, COLUMNS AND STEPS IN ACCORDANCE WITH NPS GUIDELINES
11. ARCHITECTURAL STANDING SEAM GALVALUME ROOF WITH R-19 INSULATION (MINIMUM)
12. WOOD "1" X 6" D GRADE 105" CLAPBOARD SIDING (OR EQUAL) IN ACCORDANCE WITH NPS GUIDELINES
13. NEW CEDAR SHAKE SHINGLES OVER DECK, SLATS, MOISTURE BARRIER AND R19 MINIMUM INSULATION

1 / A2.3 **RESTORED SOUTH ELEVATION**
SCALE: 1/8" = 1'-0"

1 ADD NOTE AND ESTIMATED RIDGE HEIGHT DIMENSION; TLP PE #57556 05/11/19

THE SEAL APPEARING ON THIS DOCUMENT WAS AUTHORIZED BY THOMAS L. PAXSON, P.E. ON 03/08/19. ALTERATION OF A SEALED DOCUMENT WITHOUT PROPER NOTIFICATION TO THE RESPONSIBLE ENGINEER IS AN OFFENSE UNDER THE TEXAS ENGINEERING PRACTICE ACT. TBPE REGISTRATION # F-2731

STATE OF TEXAS
T. L. PAXSON
57556
REGISTERED PROFESSIONAL ENGINEER
3/08/19

NO.	DATE	BY	DESCRIPTION
1	05/11/19	TLP	RESPONSE TO STAFF NOTES

DRAWN	TLP	DATE	03/08/2019	DATE	03/08/2019
CHECKED	TLP	DATE	03/08/2019	DATE	03/08/2019
APPROVED	TLP	DATE	03/08/2019		

PAXSON
395 SOUTH CHESTNUT, LUFKIN, TX 75901
(936) 634-4671 FAX - (936) 634-4691
TBPE REGISTRATION # F-2731

Tom Paxson, Pe, PMP, Pxsn-Sun Engineering, Inc. 5/11/2019 4:30 PM RESTORED.dwg

PAXSON HISTORIC RESTORATION
1302 SOUTH COLLEGE STREET
GEORGETOWN, TEXAS 78628-7020
RESTORED SOUTH ELEVATION

CONTRACT NO. E4117

SHEET NO. A2.3

NOTE

NEW ROOF HEIGHT REMAINS UNCHANGED EXCEPT FOR MINOR ADJUSTMENT RESULTING FROM LEVELING THE HOUSE. REFERENCE DEMOLITION DRAWINGS D2.* FOR CONDITIONS PRIOR TO RENOVATION

1

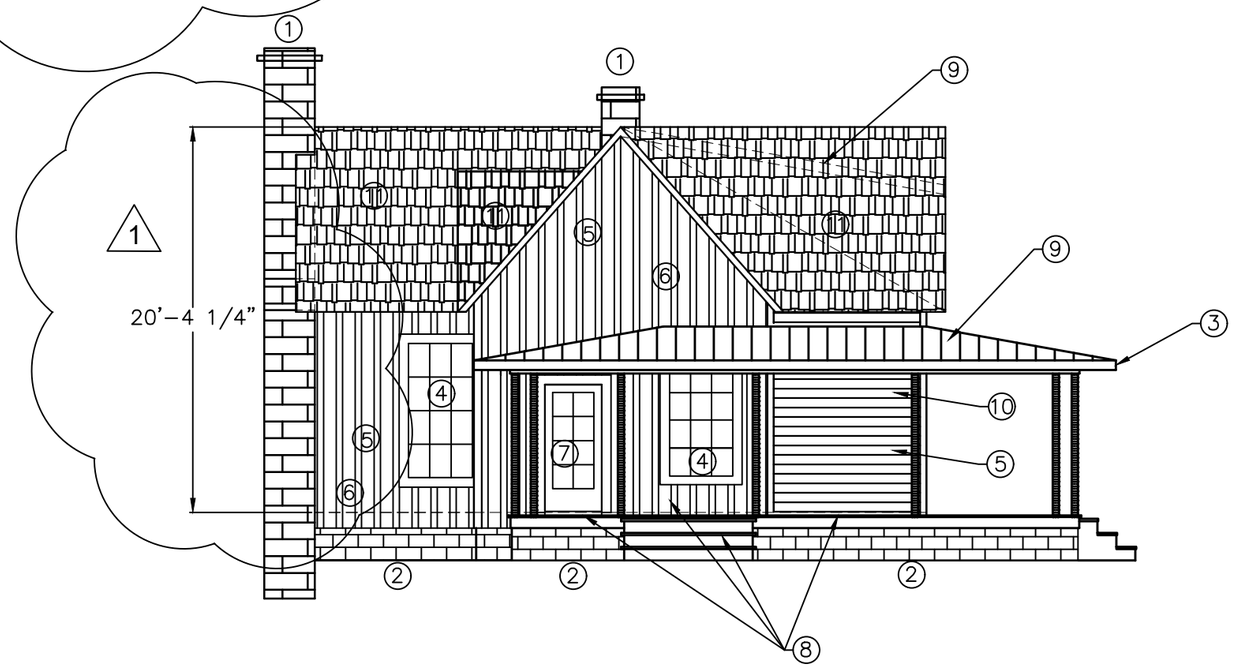

1 / A2.4 **RESTORED WEST ELEVATION**
SCALE: 1/8" = 1'-0"

RESTORATION NOTES:

1. CLEAN, REPOINT & REFLASH EXISTING CHIMNEY TO RESTORE IN ACCORDANCE WITH NPS GUIDELINES
2. NEW LIMESTONE SKIRTING WITH VENTS IN ACCORDANCE WITH NPS GUIDELINES
3. NEW PORCH WITH ARCHITECTURAL GALVALUME STANDING SEAM ROOF AND WOODEN DECK, POSTS, STAIRS AND TRIM IN ACCORDANCE WITH NPS GUIDELINES
4. RESTORE HISTORIC WINDOWS IN ACCORDANCE WITH NPS GUIDELINES
5. INSTALL R-13 FIBERGLAS BATT INSULATION IN NEW AND EXISTING WALLS
6. RESTORE THE EXISTING BOARD AND BATTEN SIDING USING MATERIALS FROM SOUTH SIDE AND PAINT IN ACCORDANCE WITH NPS GUIDELINES
7. NEW WOOD PATIO DOOR EQUAL TO PELLA ARCHITECT SERIES TRADITIONAL 850 WITH ILT GRILLE PATTERN
8. PORCH DECK, COLUMNS AND STEPS IN ACCORDANCE WITH NPS GUIDELINES
9. ARCHITECTURAL STANDING SEAM GALVALUME ROOF WITH R-19 INSULATION (MINIMUM)
10. WOOD "1" X 6" D GRADE 105" CLAPBOARD SIDING (OR EQUAL) IN ACCORDANCE WITH NPS GUIDELINES
11. NEW CEDAR SHAKE SHINGLES OVER DECK, SLATS, MOISTURE BARRIER AND R19 MINIMUM INSULATION

1 ADD NOTE AND ESTIMATED RIDGE HEIGHT DIMENSION; TLP PE #57556 05/11/19

THE SEAL APPEARING ON THIS DOCUMENT WAS AUTHORIZED BY THOMAS L. PAXSON, P.E. ON 03/08/19. ALTERATION OF A SEALED DOCUMENT WITHOUT PROPER NOTIFICATION TO THE RESPONSIBLE ENGINEER IS AN OFFENSE UNDER THE TEXAS ENGINEERING PRACTICE ACT. TBPE REGISTRATION # F-2731

STATE OF TEXAS
T. L. PAXSON
57556
REGISTERED PROFESSIONAL ENGINEER
3/08/19

NO.	DATE	BY	DESCRIPTION
1	05/11/19	TLP	RESPONSE TO STAFF NOTES

DRAWN	TLP	DATE	03/08/2019
CHECKED	TLP	DATE	03/08/2019
APPROVED	TLP	DATE	03/08/2019

PAXSON ENGINEERING
395 SOUTH CHESTNUT, LUFKIN, TX 75901
(936) 634-6671 FAX: (936) 634-6691
TBPE REGISTRATION # F-2731

Tom Paxson, Pe, PMP, Pxe-Sen Engineering, Inc. 5/11/2019 4:30 PM RESTORED.dwg

PAXSON HISTORIC RESTORATION
1302 SOUTH COLLEGE STREET
GEORGETOWN, TEXAS 78628-7020
RESTORED WEST ELEVATION

CONTRACT NO. E4117

SHEET NO. **A2.4**

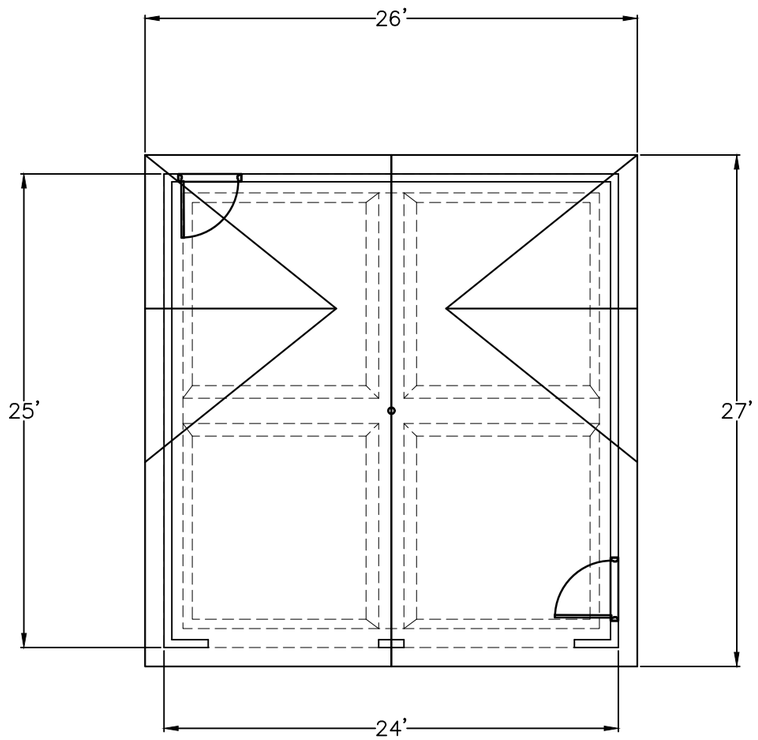

N 1 A4.1 **NEW GARAGE FLOOR PLAN**
SCALE: 1/8" = 1'-0"

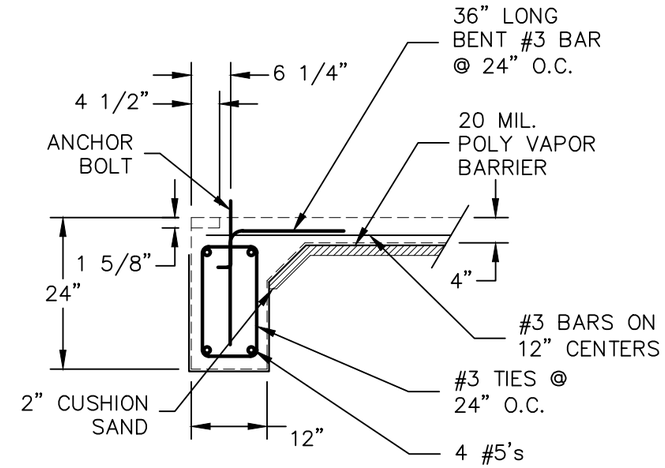

EXCAVATE TO BEDROCK AND
INSTALL COMPACTED SELECT FILL

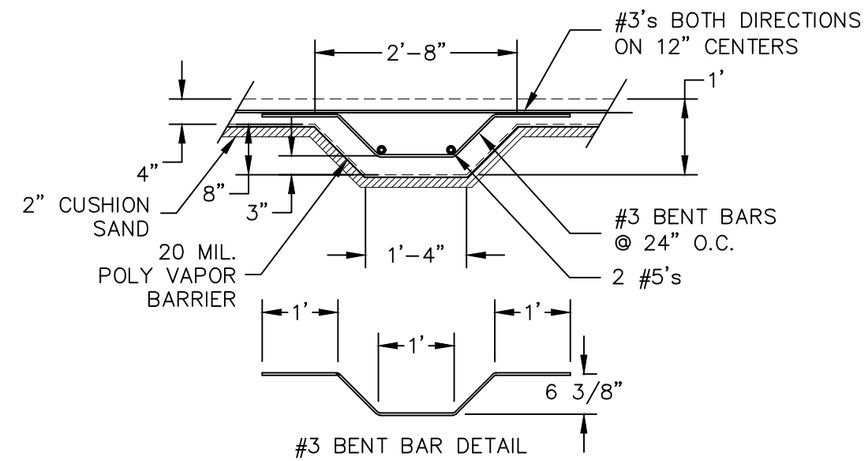

#3 BENT BAR DETAIL

2 A4.1 **SLAB DETAILS**
SCALE: N.T.S.

THE SEAL APPEARING ON THIS DOCUMENT WAS AUTHORIZED BY THOMAS L. PAXSON, P.E. ON 03/08/19. ALTERATION OF A SEALED DOCUMENT WITHOUT PROPER NOTIFICATION TO THE RESPONSIBLE ENGINEER IS AN OFFENSE UNDER THE TEXAS ENGINEERING PRACTICE ACT. TBPE REGISTRATION # F-2731

STATE OF TEXAS
T. L PAXSON
57556
REGISTERED PROFESSIONAL ENGINEER
3/08/19

NO.	DATE	BY	DESCRIPTION

DRAWN	DATE	CHECKED	DATE	APPROVED	DATE
TLP	03/08/2019	TLP	03/08/2019	TLP	03/08/2019

Tom Paxson, PE, PMP/PE, Pax-Sun Engineering, Inc. 5/11/2019 5:41 PM GARAGE.dwg

PAX-SUN
2925 SOUTH CHESTNUT, LUFKIN, TX 75901
(936) 634-4691 FAX - (936) 634-4691
TBPE REGISTRATION # F-2731

PAXSON HISTORIC RESTORATION
1302 SOUTH COLLEGE STREET
GEORGETOWN, TEXAS 78628-7020
NEW GARAGE ELEVATIONS (WITH STORAAGE)
600 SQ. FT. FIRST / 400 SQ. FT SECOND

CONTRACT NO.
E4117

SHEET NO.
A4.1

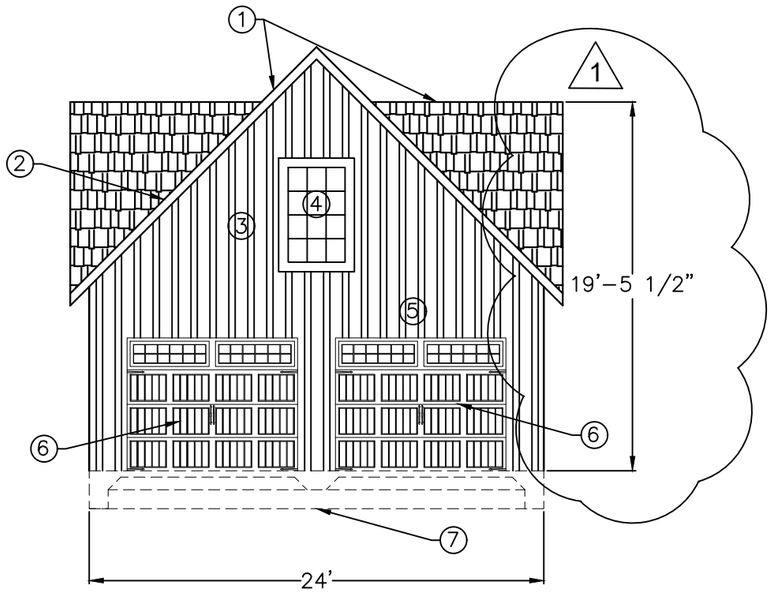

1 A4.2 **NORTH ELEVATION**
SCALE: 1/8" = 1'-0"

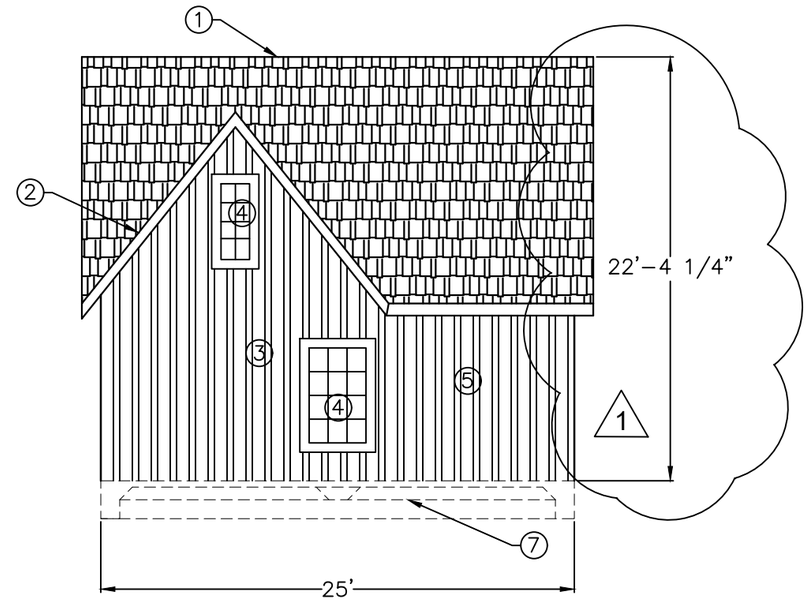

2 A4.2 **EAST ELEVATION**
SCALE: 1/8" = 1'-0"

RESTORATION NOTES:

1. NEW CEDAR SHAKE ROOF OVER DECKING WITH RADIANT BARRIER, MOISTURE BARRIER AND SLATS
2. R–19 FIBERGLAS BATT INSULATION AT ROOF
3. HARDI–PLANK SIDING WITH BATTENS TO MIMIC HISTORIC HOUSE
4. NEW SINGLE GLAZE WOODEN WINDOWS WITH MUNTINS
5. R–13 BATT INSULATION
6. 9' X 7' STEEL GARAGE DOOR EQUAL TO AMARR OAK SUMMIT 1000 PANEL WITH STOCKTON WINDOWS
7. NEW REINFORCED SLAB ON GRADE
8. NEW SOLID WOOD DOOR

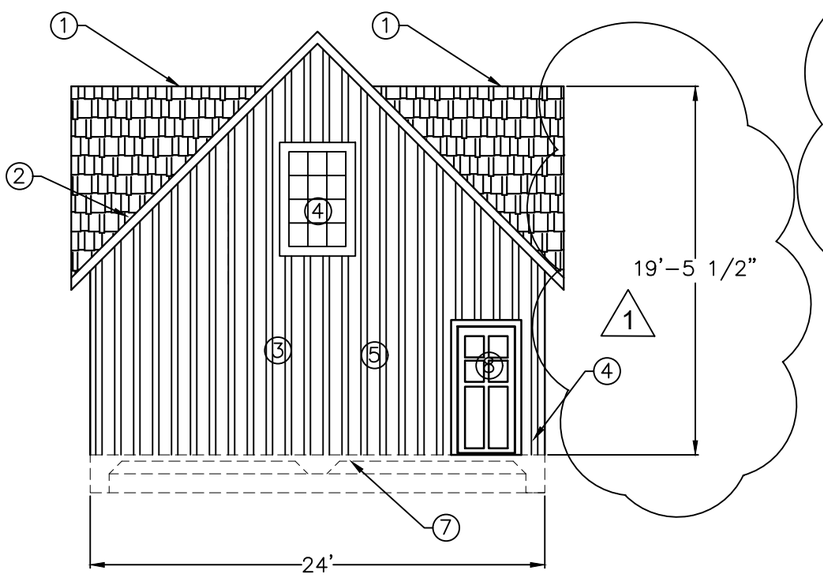

3 A4.2 **SOUTH ELEVATION**
SCALE: 1/8" = 1'-0"

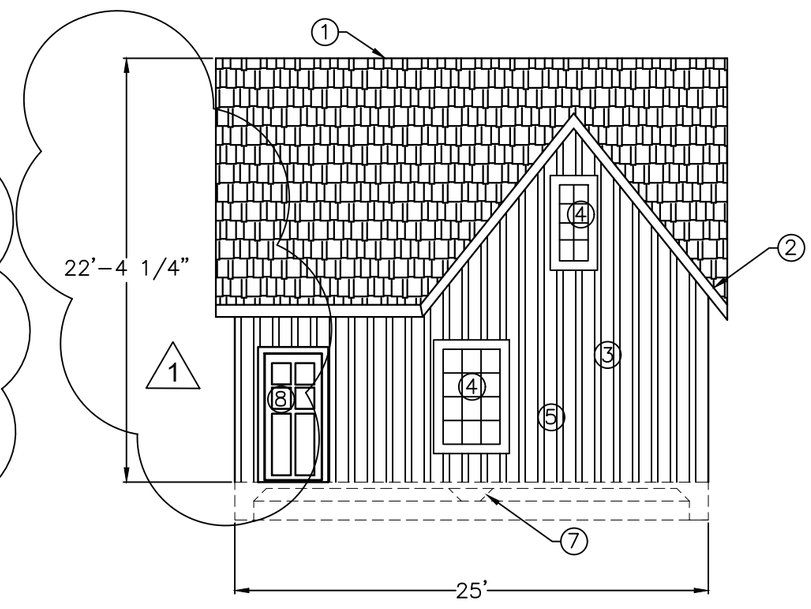

4 A4.2 **WEST ELEVATION**
SCALE: 1/8" = 1'-0"

1 ADD ESTIMATED RIDGE HEIGHT DIMENSION; TLP PE #57556 05/11/19

THE SEAL APPEARING ON THIS DOCUMENT WAS AUTHORIZED BY THOMAS L. PAXSON, P.E. ON 03/08/19. ALTERATION OF A SEALED DOCUMENT WITHOUT PROPER NOTIFICATION TO THE RESPONSIBLE ENGINEER IS AN OFFENSE UNDER THE TEXAS ENGINEERING PRACTICE ACT. TBPE REGISTRATION # F-2731

STATE OF TEXAS
T. L. PAXSON
57556
REGISTERED PROFESSIONAL ENGINEER
3/08/19

DRAWN	DATE	NO.	DATE	BY	DESCRIPTION
TLP	03/08/2019	1	05/11/19	TLP	RESPONSE TO STAFF NOTES
CHECKED	DATE				
TLP	03/08/2019				
APPROVED	DATE				
TLP	03/08/2019				

Tom Paxson, Pe, PMP, Pmc–Sim Engineering, Inc. 5/11/2019 5:41 PM GARAGE.dwg

PAX-SIM
3915 SOUTH CREEKNUT, LUFKIN, TX 75901
(936) 634-4671 FAX - (936) 634-4691
TBPE REGISTRATION # F-2731

PAXSON HISTORIC RESTORATION
1302 SOUTH COLLEGE STREET
GEORGETOWN, TEXAS 78628-7020
NEW GARAGE ELEVATIONS (WITH STORAAGE)
600 SQ. FT. FIRST / 400 SQ. FT SECOND

CONTRACT NO. E4117

SHEET NO. **A4.2**

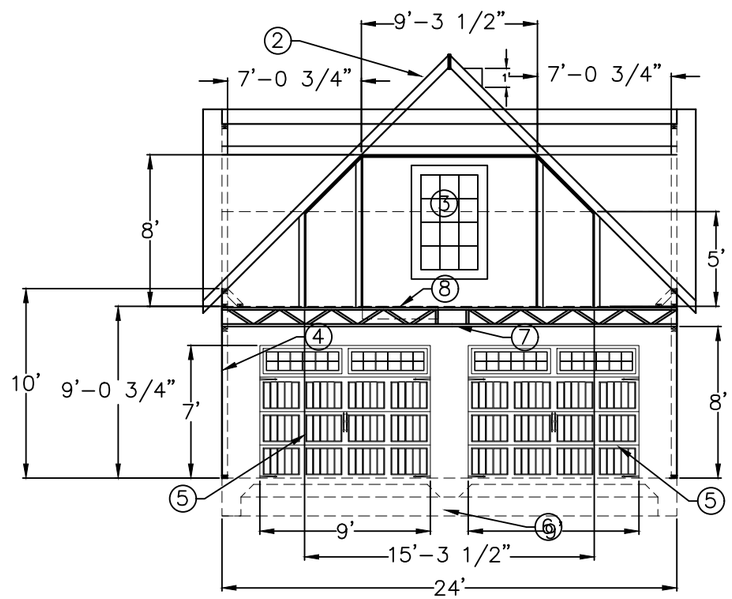

1 / A4.3 **NORTH GARAGE SECTION**
SCALE: 1/8" = 1'-0"

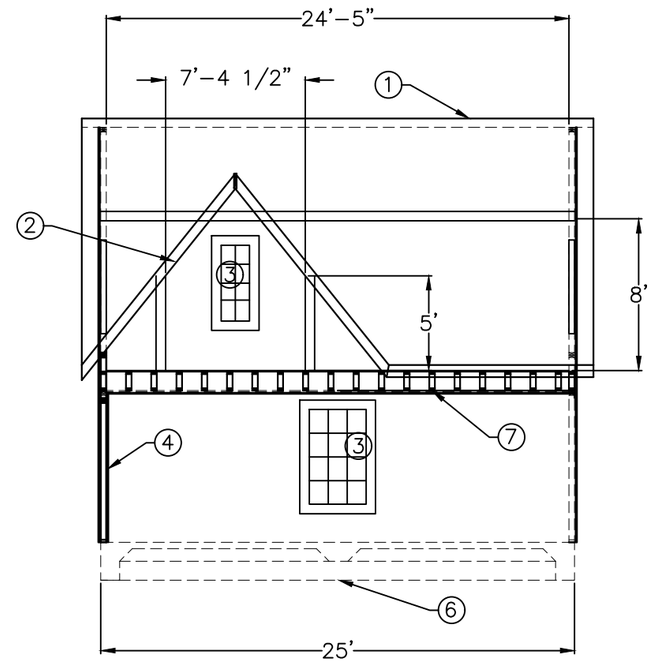

2 / A4.3 **EAST GARAGE SECTION**
SCALE: 1/8" = 1'-0"

RESTORATION NOTES:

1. NEW CEDAR SHAKE ROOF OVER DECKING WITH RADIANT BARRIER, MOISTURE BARRIER AND SLATS
2. R-19 FIBERGLAS BATT INSULATION AT ROOF
3. NEW SINGLE GLAZE WOODEN WINDOWS WITH MUNTINS
4. R-13 BATT INSULATION
5. 9' X 7' STEEL GARAGE DOOR EQUAL TO AMARR OAK SUMMIT 1000 PANEL WITH STOCKTON WINDOWS
6. NEW REINFORCED SLAB ON GRADE
7. 12" WOODEN TRUSS
8. PULL-DOWN STAIR

THE SEAL APPEARING ON THIS DOCUMENT WAS AUTHORIZED BY THOMAS L. PAXSON, P.E. ON 03/08/19. ALTERATION OF A SEALED DOCUMENT WITHOUT PROPER NOTIFICATION TO THE RESPONSIBLE ENGINEER IS AN OFFENSE UNDER THE TEXAS ENGINEERING PRACTICE ACT. TBPE REGISTRATION # F-2731

STATE OF TEXAS
T. L. PAXSON
57556
REGISTERED PROFESSIONAL ENGINEER
3/08/19

NO.	DATE	BY	DESCRIPTION

DRAWN	TLP	DATE	03/08/2019	DATE	03/08/2019
CHECKED	TLP	DATE	03/08/2019	DATE	03/08/2019
APPROVED	TLP	DATE	03/08/2019		

Tom Paxson, PE, FNSPE, Pax-Sun Engineering, Inc. 5/11/2019 5:41 PM GARAGE.dwg

PAX-SUN ENGINEERING, INC.
3302 SOUTH COLLEGE STREET
GEORGETOWN, TEXAS 78626
(512) 863-7500
(512) 863-8497 FAX
(512) 634-6471 FAX
TBPE REGISTRATION # F-2731

PAXSON HISTORIC RESTORATION
1302 SOUTH COLLEGE STREET
GEORGETOWN, TEXAS 78628-7020
NEW GARAGE ELEVATIONS (WITH STORAAGE)
600 SQ. FT. FIRST / 400 SQ. FT SECOND

CONTRACT NO.
E4117

SHEET NO.
A4.3

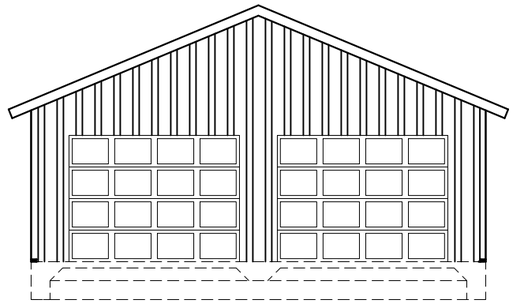

1 A4.4 **NORTH ELEVATION**
SCALE: 1/8" = 1'-0"

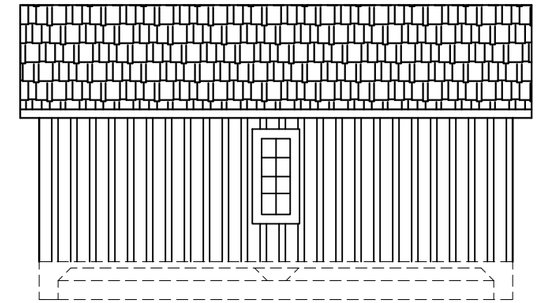

2 A4.4 **EAST ELEVATION**
SCALE: 1/8" = 1'-0"

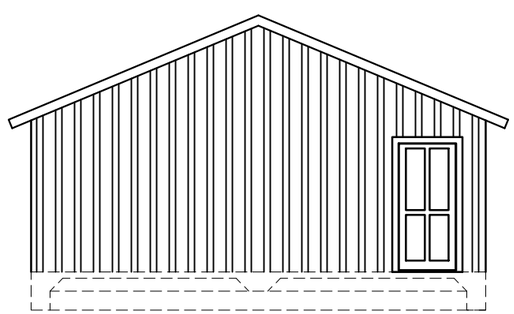

3 A4.4 **SOUTH ELEVATION**
SCALE: 1/8" = 1'-0"

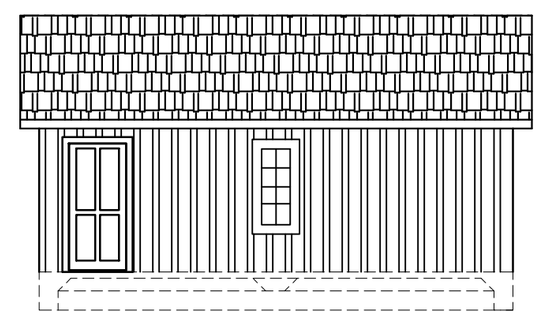

4 A4.4 **WEST ELEVATION**
SCALE: 1/8" = 1'-0"

NOTE:

THESE ELEVATIONS ONLY APPLY IF THE GARAGE SETBACK HEIGHT RESTRICTIONS CANNOT BE WAIVED. THE ROOF PITCH IS 5:12.

THE SEAL APPEARING ON THIS DOCUMENT WAS AUTHORIZED BY THOMAS L. PAXSON, P.E. ON 03/08/19. ALTERATION OF A SEALED DOCUMENT WITHOUT PROPER NOTIFICATION TO THE RESPONSIBLE ENGINEER IS AN OFFENSE UNDER THE TEXAS ENGINEERING PRACTICE ACT. TBPE REGISTRATION # F-2731

STATE OF TEXAS
T. L. PAXSON
57556
REGISTERED PROFESSIONAL ENGINEER
3/08/19

DRAWN	DATE	NO.	DATE	BY	DESCRIPTION
TLP	03/08/2019				
CHECKED	DATE				
TLP	03/08/2019				
APPROVED	DATE				
TLP	03/08/2019				

Tom Paxson, Pe, PMP, Pax-Sun Engineering, Inc. 5/11/2019 5:41 PM GARAGE.dwg

PAX-SUN
3153 SOUTH CHESTNUT, LUFKIN, TX 75901
(936) 634-6611 FAX - (936) 634-6651
TBPE REGISTRATION # F-2731

PAXSON HISTORIC RESTORATION
1302 SOUTH COLLEGE STREET
GEORGETOWN, TEXAS 78628-7020
NEW GARAGE ELEVATIONS 600 SQ. FT.

CONTRACT NO.
E4117

SHEET NO.
A4.4

Williamson County Historical Commission

G. W. Riley House

(also called Lane / Riley House)

Historical Marker

Georgetown, Texas

circa 1872

click on thumbnail image for an enlarged view

1302 College Street
Lane - G. W. Riley House

GPS Coordinates
Latitude: 30.63222 - Longitude: -97.67183
Degrees, Minutes, Seconds
+30°37'55.99", -97°40'18.59"
UTM 14 R - Easting: 627316 - Northing: 3389393

Recorded Texas Historic Landmark

Lane-Riley House. 1302 College. One-and a-half-story wood-frame dwelling with central-hall with early rear ell addition; exterior walls with board and batten; cross gable roof with wood-shingle covering; front elevation faces east; one exterior and one interior stone chimney, each with corbeled cap; wood-sash double-hung windows with 4/4 and 6/6 lights; single-door entrance with transom and sidelights; one-story one-bay porch with shed roof on east elevation; wood posts. Other noteworthy features include symmetrical three-bay facade; gabled extension with central doorway rises above center bay; exterior chimney with ashlar-cut stone construction extends from north gable end of original; interior stone chimney rises from rear ell; rear ell has gabled extensions--two on north side and one on south side; each gable with 4/4 light windows. Outbuildings include stone-lined cistern with pyramidal roof covering.

Historical Marker Text
Built 1872 by the Rev. S. J. Lane, chaplain, Southwestern University; founder, First Methodist church, Georgetown. Bought 1903 by the Rev. George W. Riley (1853-1925), a grandson of Llano County Indians' 1859 victim, the Rev. Jonas Dancer. G. W. Riley founded or served Methodist churches in Abilene, Beaumont, Douglassville, Mineral Wells, Tyler, and other towns for 48 years. He and wife, Beulah G. (Matthews) moved here to educate children; house remains in family.

Recorded Texas Historic Landmark - 1972

Reverend George Washington Riley (G.W. Riley) (1853 - 1925)

Historical narrative by Nancy Mundinger
Daughter of Reverend Jonas Dancer
Mother of Reverend George Washington Riley Wife of William McKendree Riley.

Reverend Riley was born February 24, 1853 at Honey Creek cove and was six years old when his Grandfather was killed by the Indians. The family abandoned this settlement and moved to Williamson County and settled near Roundrock. He graduated and later taught at the Greenwood Masonic Institute in Old Roundrock. At that time, Mr. Davis S. Switzer was head of the institute. to fought in the Civil War at the age of 16.

Reverend Riley was licensed to preach at the age of 24. He joined the East Texas Conference in October 1889.

He was a circuit rider often preaching in ranch houses, He organized numerous and built numerous Methodist churches including Tyler, Douglasville, Beaumont and Mineral Wells - the first Methodist Church in Abilene. He belonged to several Texas Conferences during his 48 year ministry.

He died on March 6, 1925; this was a Tuesday and he had preached the day before.

Clementine Dancer Riley (1832-1915)

Historical narrative by Nancy Mundinger
Daughter of Reverend Jonas Dancer
Mother of Reverend George Washington Riley Wife of William McKendree Riley.

Clemontine Dancer Riley was born in Tennessee in 1832. Rode horseback to Texas at the age of 15, and helped her father drive the stock. Her mother and younger children rode in a wagon.

She was married in Austin, a village in 1850, to William McKendree Riley who was born in Kentucky in 1825. He moved to Texas and fought in the Mexican war. He died at his horse ranch in 1895. This couple moved with Reverend Dancer and two married daughters , Tennessee Jane and Matilda, and younger brother, James, to Llano County in 1850. They settled in a community which they called Honey Creek Cove, 14 miles south of Llano town. They built cabins on the banks of Honey Creek near a beautiful spring with an enormous boulder beside. Wild game, fish and Honey was plentiful. Their life pleasant in spite of the fact that Indians were constantly to be

feared and the women folk never went for water without carrying a rifle.

In 1859, Reverend Dancer left the cabin early one morning to meet other settlers to widen a road that would accommodate buggies. The first such road to be endevored toward the town of Llano.

When the other settlers arrived, they found his tools scattered and his body with seven arrows in it and he had also been scalped. The Comanche Indians were so fierce that Clementine Riley and her family moved from Honey Creek to Round Rock.

Clementine Dancer Riley lived in this house in Georgetown from 1908 until she died there in 1915. She is buried at Bear Creek Cemetery in Burnet, Texas along with her husband, William McKendree Riley.

When Rev. Riley moved his family to Georgetown, Annie Pearl, the eldest daughter, was 16. The year was 1906. Miss Riley had just graduated from Alexander Colligiate Institute in Jacksonville, Texas (a Methodist School founded by Dr. Isaac Alexander, a Methodist minister who had ridden horseback from Virginia after graduation from Emory and Henry).

Alexander Institute later became known de as Lon Morris Junior College. Rev. Riley was president of the Board of Trustees at Alexander Institute. The faculty members were from Oberlin, Vanderbilt, Southwester, and the University of Texas.

Buelah Maud Riley, the second child, was 14. She attended The Southwestern Prep School located in the old three story stone building which was on the site of the present Georgetown High School.

Susie Blewett, age 12, attended Georgetown Public Schools as did George William Riley, age 10.

When the College Street home was bought in 1908 Rev Riley kept his appointments in other churches in central Texas coming home when he could. In the summer Mrs. Riley would join him leaving the girls to keep house and to send their brother to summer school at the University. Young Riley preferred calf riding on the Yearwood Ranch to school work.

GARDEN, by Nancy Mundinger

The south three quarters of the length of side lot was planted in a garden in the spring and fall. Rev. Riley planted Irish and sweet potatoes, was beans, black eyed and English peas (sometimes called saucer peas because they were so difficult to grow, seldom growing more than a saucer full. Since they had to be planted Christmas week, they often froze.) A favorite after school snack was a cold biscuit with fresh radishes and onions. Bermuda onions were hung in bunches from the barn rafters.

Okra, bell peppers, tomatoes, butter beans that were "fence grown, Kentucky Wonders , also known as poll beans, were planted each season. Kershaw, a long necked sweet vegetable of the pumpkin family grew on ground vines. Also lady peas a white, black-eyed peas was grown. Mrs. Riley canned and preserved from peach trees, plum and pear. She was a wonderful cook having been taught by her mother as she was growing up in Mississippi. She assisted her mother in preparing large quantities of food for the field hands on their farm where cotton was grown.

Rev. Riley planted several hackberry trees in the yard which he had dug in the woods. A lilac bush is still blooming each year as is a very large purple crepe myrtle that is still growing, spreading, and blooming. These came from a plantation about three miles from Cameron, Texas. A lady called Aunt Lizzie Wilson. lived in a house that is still standing that was built before the Civil War. She gave these plants to Rev. Riley from her yard in 1908

MUSIC LESSONS, by Nancy Mundinger

Annie Pearl Riley took music lessons at Alexander Institute. having had earlier training in Tyler.

She had a lovely soprano voice always singing with the choir. She played the organ as soon as her feet barely touched the pedals. Papa would call for the songs he knew she could play at prayer meeting. He also took her with him to sing at funerals in country churches.

BARN, by Nancy Mundinger

A large frame barn was located on the back of the lot with a buggy shed and stalls for cows and horses. There was also a fenced cow lot. Their large horses were Prince and Major. In Georgetown they also had a buggy. Once during a deep snow Papa (Rev Riley) put runners on the buggy so all of the family could enjoy a country drive. The girls all wore crocheted fascinators, a crocheted shawl or scarf put overhead and tied under chin, making a beautiful frame for the face.

The roads were so narrow with trees growing to the edge of the road, great care was needed to keep the hub of a buggy wheel from scraping. Occasional places were provided in the road for buggies and wagons to pass.

Finale, by Nancy Mundinger

The children studying was all done by kerosene lamps on pine tables. The eldest graduated with distinction from Southwestern University elected to the Scholorshio Society being one of seven out of an enrollment of eight hundred.

The girls slept in the upstairs room led to by a small staircase. Grandma Riley (Clementine Dancer Riley) and her grandson George slept in a back bedroom. A long hall ran down the center of the house. Rev. and Mrs. Riley slept in the north room with a fire place and the parlor was on the south side of the hall, each room being 12x18 feet. The hall itself was 8 feet wide. At 8:30 each evening Grandma would say, "Brother, it is our bedtime" so they would leave the fireside.

Grandma was standing putting on overshoes when she fell and broke her hip at age 83. She died soon after and was buried at Bear Creek Cemetery in Bertram. Her body was taken there by train. Her husband and his family is also buried there. Rev. and Mrs. Riley are buried in Dallas at Grove Hill Cemetery.

view **PDF of marker dedication**

---

for more info also view

http://www.georgetown-texas.org/

view more **Historical Markers in Georgetown**

view **view other communities pages**

Properties Documented with the THC Form in 2007 and/or 1984 That Have Not Changed Preservation Priority

Address:	1302 College St	2016 Survey ID:	124456
City	Georgetown	2016 Preservation Priority:	High
County	Williamson	Local District:	Old Town District

SECTION 1

Basic Inventory Information

Property Type: ☑ Building ☐ Structure ☐ Object ☐ Site ☐ District WCAD ID: R042785

Construction Date: 1872 ☑ Actual ☐ Estimated Source: WCAD

Latitude: 30.632186 Longitude -97.672139

Current/Historic Name Lane-Riley House

Stylistic Influence(s)* ☑ None Selected

☐ Log traditional	☐ Shingle	☐ Gothic Revival	☐ Pueblo Revival	☐ International
☐ Greek Revival	☐ Romanesque Revival	☐ Tudor Revival	☐ Spanish Colonial	☐ Post-war Modern
☐ Italianate	☐ Folk Victorian	☐ Neo-Classical	☐ Prairie	☐ Ranch
☐ Second Empire	☐ Colonial Revival	☐ Beaux Arts	☐ Craftsman	☐ Commercial Style
☐ Eastlake	☐ Renaissance Revival	☐ Mission	☐ Art Deco	☐ No Style
☐ Queen Anne	☐ Exotic Revival	☐ Monterey	☐ Moderne	☐ Other:

Plan*

☐ L-plan ☐ T-plan ☐ Modified L-plan ☐ 2-room ☐ Open ☑ Center Passage ☐ Bungalow ☐ Shotgun
☐ Irregular ☐ Four Square ☐ Rectangular ☐ None Selected ☐ Other:

Priority: **2016 Survey** ID: 124456 ☑ High ☐ Medium ☐ Low

Explain: Excellent and/or rare example of its type or style, and/or has significant associations; retains sufficient integrity

2007 Survey ID: 1021 ☑ High ☐ Medium ☐ Low

1984 Survey ID: 657 ☑ High ☐ Medium ☐ Low

General Notes: (Notes from 2007 Survey: None)

Recorded by: CMEC Date Recorded 3/4/2016

*Photographs and Preservation Priority have been updated in 2016, and the year built date has also been reviewed. However, the plan and style data are sourced directly from the 2007 survey.

Photo direction: West

Note: See additional photo(s) on following page(s)

Address:	1302 College St	2016 Survey ID:	124456
City	Georgetown	2016 Preservation Priority:	High
County	Williamson	Local District:	Old Town District

Additional Photos

Photo Direction South

Well

Photo Direction South

Photo Direction Southwest

March 21, 2019

Tom Paxson
3913 South Chestnut
Lufkin, Texas 75901

Re: Recorded Texas Historic Landmark project review, Rehabilitation of the G.W. Riley House, 1302 S. College St., Georgetown, Williamson County (RTHL)

Dear Mr. Paxson:

Thank you for submitting information regarding proposed project work on your Recorded Texas Historic Landmark (RTHL) during a meeting with our staff on March 11, 2019 at the Division of Architecture. This letter represents the comments of the Executive Director of the Texas Historical Commission.

The review staff, led by Pam Opiela, has completed its review of the project documentation provided and has the following comments: The proposed work is an addition to the south side of the existing house with the addition of a porch on the south and west sides. The work will correspond to the construction drawings and specifications that accompanied the summary of the scope of work, including horizontal siding on the new addition, new windows and doors that are compatible, but clearly non-historic, on the addition, and a metal roof on the center portion of the south addition and new porch. Historic windows to be removed from the south side of the house to accommodate the new addition will be stored for possible future use. The existing rear door will be removed, and a new door added to the left of the rear façade. An historic window will replace the existing non-historic door in the upper gable of the front façade since a window would almost certainly have been in this opening originally.

The work proposed meets the *Secretary of the Interior's Standards.* We waive the remainder of the waiting period and work can begin on this project.

We look forward to further consultation with your office and hope to maintain a partnership that will foster effective historic preservation. Thank you for your interest in the cultural heritage of Texas, and for the opportunity to comment on this proposed project in accordance with Recorded Texas Historic Landmark legislation. **If you have any questions concerning our review or if we can be of further assistance, please contact Pam Opiela at 512/463-8952.**

Sincerely,

Pam Opiela, Project Reviewer
For: Mark Wolfe, Executive Director

Cc: Eloise Brackenridge, Williamson County Historical Commission (via email)

MW/PO

The Lane-Riley House Historic Restoration and Site Improvements
2019

The Lane-Riley House Historic Restoration and Site Improvements
2019

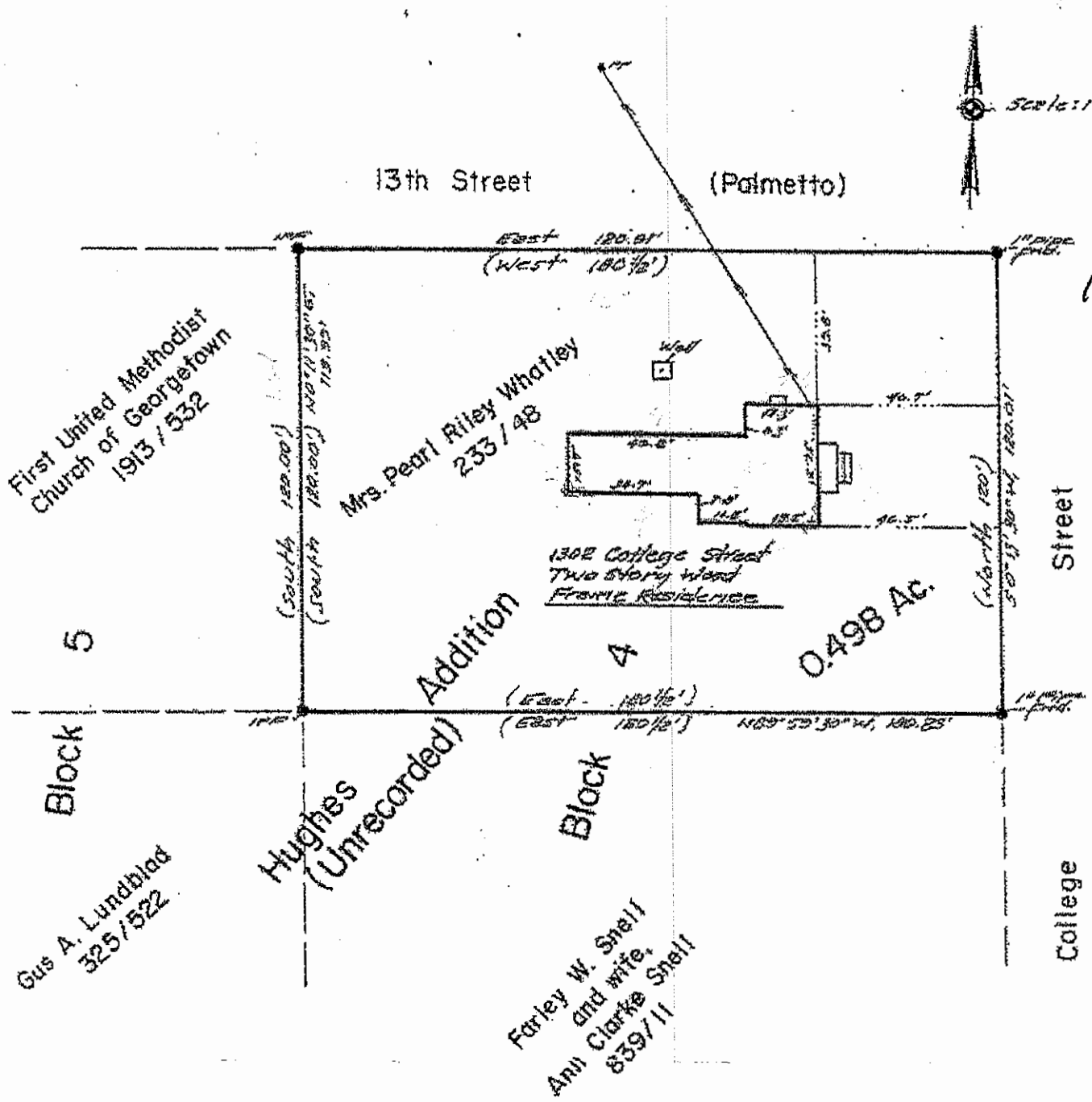

D4D
12-12-12

Mrs. Pearl Riley Whatley Tract
A Portion of Block 4 of the Hughes Addition
to the City of Georgetown
Williamson County, Texas

I, Don H. Bizzell REGISTERED PROFESSIONAL LAND SURVEYOR, DO HEREBY CERTIFY THAT THE ABOVE PLAT CORRECTLY REPRESENTS THE PROPERTY AS DETERMINED BY AN ON-THE-GROUND SURVEY PERFORMED UNDER MY SUPERVISION AND DIRECTION ON THE 16th DAY OF August, 2004; THE PROPERTY PLATTED HEREON IS CORRECT AND THERE ARE NO APPARENT DISCREPANCIES, CONFLICTS, SHORTAGES IN AREA, BOUNDARY LINE CONFLICTS, ENCROACHMENTS, OVERLAPPING OF IMPROVEMENTS, VISIBLE UTILITY LINES OR ROADS IN PLACE, EXCEPT AS SHOWN HEREON, AND SAID PROPERTY HAS ACCESS TO AND FROM A DEDICATED ROADWAY, EXCEPT AS SHOWN HEREON.

STATE OF TEXAS REGISTERED DON H. BIZZELL 2218 PROFESSIONAL LAND SURVEYOR

FLOOD STATEMENT: I HAVE EXAMINED THE FEDERAL INSURANCE ADMINISTRATIONS FLOOD HAZARD MAP FOR Williamson COUNTY, TEXAS, COMMUNITY NO. 48491 EFFECTIVE DATE OF Sept 29, 1991 AND THAT MAP INDICATES THAT THIS PROPERTY is not WITHIN ZONE A (SPECIAL FLOOD HAZARD AREA) AS SHOWN ON PANEL 0253C OF SAID MAP.
WARNING: IF THIS SITE IS NOT WITHIN AN IDENTIFIED SPECIAL FLOOD HAZARD AREA, THIS FLOOD STATEMENT DOES NOT IMPLY THAT THE PROPERTY AND/OR STRUCTURES THEREON WILL BE FREE FROM FLOODING OR FLOOD DAMAGE. ON RARE OCCASIONS, GREATER FLOODS CAN AND WILL OCCUR AND FLOOD HEIGHTS MAY BE INCREASED BY MAN-MADE OR NATURAL CAUSES. THIS FLOOD STATEMENT SHALL NOT CREATE LIABILITY ON THE PART OF THE SURVEYOR.

Steger & Bizzell Engineering, Inc.
Consulting Engineers Surveyors
1978 South Austin Avenue
Georgetown, Texas 78626
Telephone (512)930-9412 Facsimile (512)930-9415

JOB NO. 20548

LEGAL DESCRIPTION FOR DAN MUNDINGER

BEING 0.498 of an acre of land, being a portion of Block 4, of the Hughes Addition to the City of Georgetown, Texas, (an Unrecorded Addition), being that certain tract of land as conveyed to Mrs. Pearl Riley Whatley by deed as recorded in Volume 233, Page 48, of the Deed Records of Williamson County, Texas. Surveyed on the ground in the month of August, 2004, under the supervision of Don H. Bizzell, Registered Professional Land Surveyor, and being more particularly described as follows;

BEGINNING at a 1" pipe found at the intersection of the south line of 13th (Palmetto) Street and the west line of College Street, marking the Northeast corner of the above-referenced Block 4, being the Northeast corner of the above-referenced Whatley tract, for the Northeast corner hereof;

THENCE, along the said west line of College Street, being the east line of the said Block 4, S 0° 13' 30" W, 120.01 feet to a 1" pipe found marking the Southeast corner of the said Whatley tract, being the Northeast corner of that certain tract of land as conveyed to Farley W. Snell and wife, Ann Clarke Snell, by deed as recorded in Volume 839, Page 11, of the Deed Records of Williamson County, Texas, for the Southeast corner hereof;

THENCE, N 89° 59' 30" W, 180.83 feet to an iron pin found on the west line of the said Block 4, marking the Southwest corner of the said Whatley tract, being the Northwest corner of the said Snell tract, the Northeast corner of that certain tract of land as conveyed to Gus A. Lundblad by deed as recorded in Volume 325, Page 572, of the Deed Records of Williamson County, Texas, and the Southeast corner of that certain tract of land as conveyed to First United Methodist Church of Georgetown of record in Volume 1913, Page 532, of the Official Records of Williamson County, Texas, for the Southwest corner hereof;

THENCE, N 0° 11' 30" E, 119.99 feet to an iron pin found on the said south line of 13th Street, marking the Northwest corner of the said Block 4, being the Northwest corner of the said Whatley tract and the Northeast corner of the said First United Methodist Church of Georgetown tract, for the Northwest corner hereof;

THENCE, along the said south line of 13th Street, East 180.91 feet, to the Place of BEGINNING and containing 0.498 of an acre of land.

STATE OF TEXAS }

KNOW ALL MEN BY THESE PRESENTS:

COUNTY OF WILLIAMSON }

I, Don H. Bizzell, Registered Professional Land Surveyor, do hereby certify that this survey was made on the ground of the property legally described hereon and is correct, and that there are no apparent discrepancies, conflicts, overlapping of improvements, visible utility lines or roads in place, except as shown on the accompanying plat, and that said property has access to and from a public roadway, to the best of my knowledge and belief.

To certify which, witness my hand and seal at Georgetown, Williamson County, Texas, this the 16th day of August, 2004, A.D.

Don H. Bizzell
Registered Professional Land Surveyor, No. 2218
State of Texas

STATE OF TEXAS REGISTERED DON H. BIZZELL 2218 PROFESSIONAL LAND SURVEYOR

20548-ld.doc

Steger & Bizzell Engineering, Inc.
Consulting Engineers
Surveyors
1876 South Austin Avenue
Georgetown, Texas 78626
Telephone: (512) 930-9412
Facsimile: (512) 930-9418

These drawings are the sole property of STEGER BIZZELL. The use of these drawings is hereby restricted to the original site for which they were prepared. Reproduction or reuse of these drawings in whole or in part without written permission of STEGER BIZZELL is strictly prohibited.

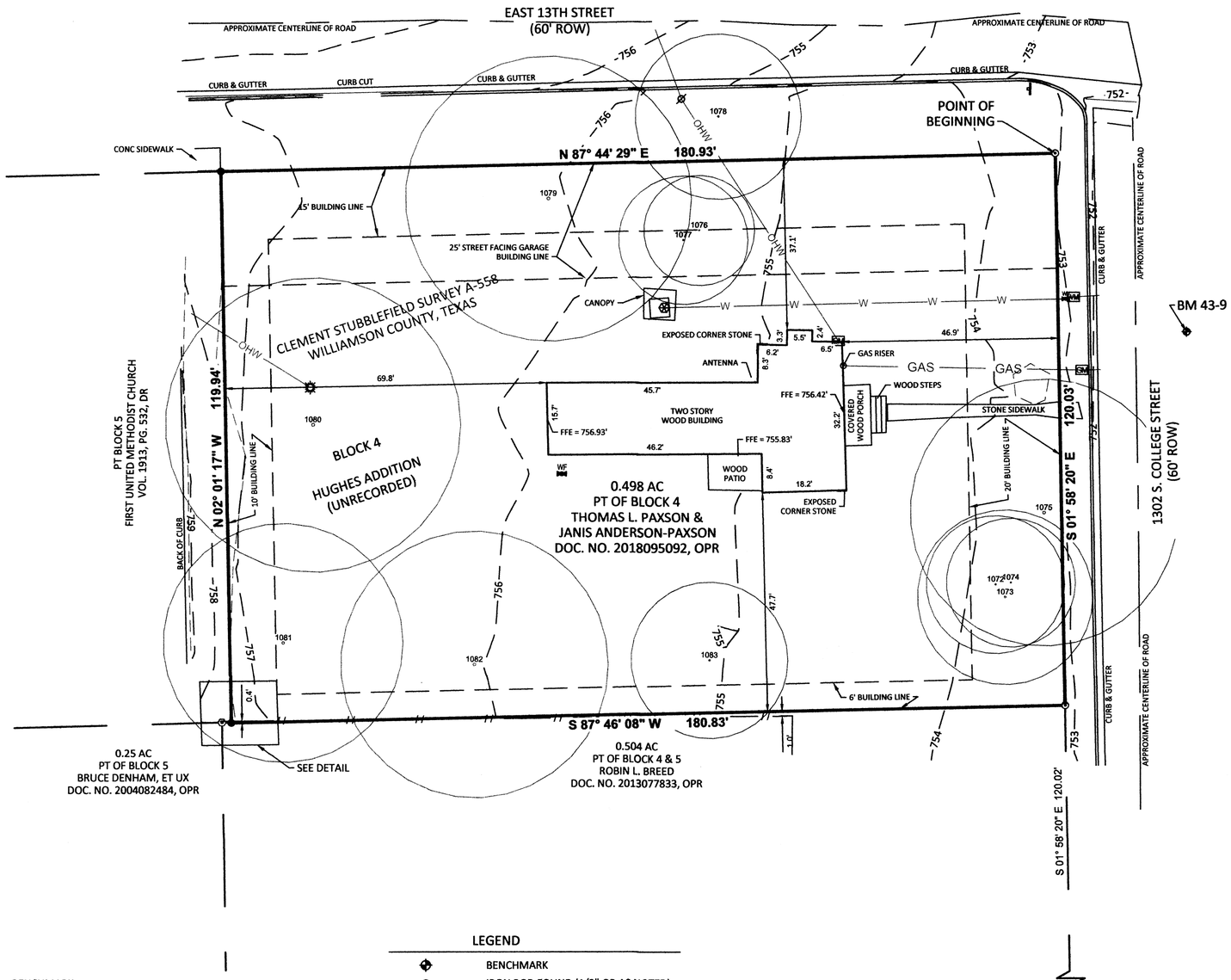

HERITAGE TREE LIST	
TAG #	Description
1075	29in LIVE OAK
1079	31in (M) PECAN
1080	32in LIVE OAK
1081	26in UNKNOWN
1082	29in LIVE OAK

PROTECTED TREE LIST	
TAG #	Description
1072	15in LIVE OAK
1073	19in LIVE OAK
1074	14in LIVE OAK
1076	12in LIVE OAK
1077	14in LIVE OAK
1078	18in LIVE OAK
1083	17in LIVE OAK

NOTES:

1. BEARINGS ARE BASED ON THE TEXAS COORDINATE SYSTEM OF 1983, CENTRAL ZONE (NAD_83 (2011)). ALL DISTANCES SHOWN HEREON ARE SURFACE VALUES REPRESENTED IN U.S. SURVEY FEET BASED ON A GRID-TO-SURFACE COMBINED ADJUSTMENT FACTOR OF 1.00013.
2. VERTICAL POSITIONS WERE DETERMINED USING THE "LEICA SMARTNET" AND GPS REAL TIME SURVEY METHODS AND ARE REFERENCED TO NORTH AMERICAN VERTICAL DATUM (NAVD) 88, USING GEOID 12A.
3. THE SYMBOLS REFLECTED IN THE LEGEND AND ON THIS SURVEY MAY HAVE BEEN ENLARGED FOR CLARITY. THE SYMBOLS HAVE BEEN PLOTTED AT THE CENTER OF THE FIELD LOCATION AND MAY NOT REPRESENT THE ACTUAL SIZE OR SHAPE OF THE FEATURE.
4. UTILITY INFORMATION SHOWN HEREON CONSTITUTES FIELD RECOVERY OF OBSERVED EVIDENCE OF UTILITIES TOGETHER WITH EVIDENCE FROM MARKINGS BY UTILITY COMPANIES CONTACTED THROUGH THE "DIG TESS" UTILITY LOCATING SERVICE. LOCATIONS OF UNDERGROUND UTILITIES/STRUCTURES MAY VARY FROM LOCATIONS SHOWN HEREON. ADDITIONAL BURIED UTILITIES/STRUCTURES, SUCH AS ELECTRICAL, TELEPHONE, CABLE TV AND PIPELINES, MAY BE ENCOUNTERED. NO EXCAVATIONS WERE MADE DURING THE PROGRESS OF THIS SURVEY TO LOCATE BURIED UTILITIES/STRUCTURES. FOR INFORMATION REGARDING BURIED UTILITIES/STRUCTURES OR BEFORE ANY EXCAVATION IS BEGUN, CONTACT THE APPROPRIATE AGENCIES FOR VERIFICATION OF UTILITY TYPE AND FOR FIELD LOCATION. THERE WAS NO EVIDENCE OF SANITARY/WASTEWATER UTILITIES OBSERVED ON THE SUBJECT TRACT.
5. BY GRAPHIC PLOTTING ONLY, THIS PROPERTY IS IN ZONE X (NOT SHADED) - AREAS DETERMINED TO BE OUTSIDE THE 0.2% ANNUAL CHANCE FLOODPLAIN AS DEFINED BY THE FEDERAL EMERGENCY MANAGEMENT AGENCY, FLOOD INSURANCE RATE MAP, COMMUNITY PANEL NO. 48491C0295E, THAT BEARS AN EFFECTIVE/REVISED DATE OF SEPTEMBER 26, 2008. THE SURVEYOR MAKES NO ASSURANCE AS TO THE ACCURACY OF THE DELINEATIONS SHOWN ON THE FEDERAL EMERGENCY MANAGEMENT AGENCY FLOOD INSURANCE RATE MAP. THIS STATEMENT IS FOR INSURANCE PURPOSES ONLY AND IS NOT AN OPINION THAT THE PROPERTY WILL OR WILL NOT FLOOD. A FLOOD STUDY WAS NOT CONDUCTED ON THE PROPERTY.
6. TREES SHOWN HERE ON WERE LOCATED AND MEET THE STANDARDS SET FORTH IN THE CITY OF GEORGETOWN UNIFIED DEVELOPMENT CODE, CHAPTER 8: TREE PRESERVATION, LANDSCAPING AND FENCING, SECTION 8.02 TREE PRESERVATION AND PROTECTION. OTHER TREES AND VEGETATION MAY EXIST ON SITE.
7. TREE CROWNS SHOWN HERE ON ARE A GRAPHICAL DEPICTION OF THE PROBABLE EXTENTS OF THE TREE CANOPY BASED ON THE TRUNK SIZE USING THE FORMULA OF ONE (1) FOOT OF RADIUS FOR EVERY ONE (1) INCH OF TRUNK DIAMETER AND MAY NOT REPRESENT THE ACTUAL SIZE OR SHAPE OF THE TREE CANOPY.
8. TREE DIAMETER OF MULTI-TRUNK TREE DETERMINED BY ADDING THE DIAMETER OF THE LARGEST TRUNK TO 1/2 THE DIAMETER OF EACH ADDITIONAL TRUNK
9. THIS SURVEY WAS MADE WITHOUT THE BENEFIT OF AN ABSTRACT OF TITLE OR TITLE COMMITMENT. THERE MAY BE EASEMENTS, OR OTHER MATTERS, NOT SHOWN HEREON, THAT MAY AFFECT THE PROPERTY. SURVEYOR HAS MADE NO INDEPENDENT INQUIRY AS TO EASEMENTS AND RESTRICTIONS AFFECTING THE PROPERTY.
10. THE USE OF THE WORD "CERTIFY" OR "CERTIFICATION" ON THIS DOCUMENT ONLY CONSTITUTES AN EXPRESSION OF PROFESSIONAL OPINION REGARDING THOSE FACTS OR FINDINGS WHICH ARE THE SUBJECT OF THE CERTIFICATION, AND DOES NOT CONSTITUTE A WARRANTY OR GUARANTEE, EITHER EXPRESSED OR IMPLIED.
11. BUILDING SETBACKS THAT ARE GRAPHICALLY SHOWN HEREON ARE PER THE CITY OF GEORGETOWN UNIFIED DEVELOPMENT CODE (UDC) CHAPTER 6, SECTION 6.02.050-RS-RESIDENTIAL FAMILY. BUILDING SETBACK LINES ARE FOR VISUAL REFERENCE ONLY, REFER TO THE SETBACK LISTINGS IN CHAPTER 6 OF THE UDC.
12. REFERENCE IS HEREON MADE TO THE METES AND BOUNDS DESCRIPTION OF THIS TRACT ACCOMPANYING THIS PLAT.

BENCHMARK

BM 43-9: MAG NAIL WITH WASHER STAMPED "CONTROL POINT" SET IN TOP OF CURB. APPROXIMATELY 68 FEET SOUTH OF CENTERLINE OF E. 13TH STREET, AND APPROXIMATELY 11 FEET EAST OF CENTERLINE OF S. COLLEGE STREET.
GRID NORTHING: 10203688.90
GRID EASTING: 3133558.91
ELEV: 752.49' (NAVD 88)

DETAIL SCALE 1" = 5'

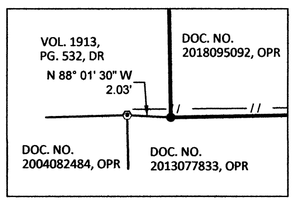

LEGEND

	BENCHMARK
	IRON ROD FOUND (1/2" OR AS NOTED)
	IRON PIPE FOUND (3/4" OR AS NOTED)
	COTTON SPINDLE FOUND
	WELL
WF	WATER FAUCET
WM	WATER METER
WV	WATER VALVE
GM	GAS METER
GV	GAS VALVE
EM	ELECTRIC METER
	LIGHT POLE
	UTILITY POLE
	SIGN POST
—// —	WOOD FENCE
—OHW—	OVERHEAD WIRES
—GAS—	UNDERGROUND GAS
—W—	UNDERGROUND WATER
ROW	RIGHT-OF-WAY
OPR	OFFICIAL PUBLIC RECORDS OF WILLIAMSON COUNTY, TEXAS
DR	DEED RECORDS OF WILLIAMSON COUNTY, TEXAS

20' 15' 10' 5' 0' 10' 20'

GRAPHIC SCALE: 1" = 20'

THIS IS TO CERTIFY THAT THIS SURVEY WAS MADE ON THE GROUND IN NOVEMBER, 2018, BY ME OR UNDER MY SUPERVISION, THAT THIS SURVEY PLAT REPRESENTS THE FACTS FOUND AT THE TIME OF THE SURVEY.

STEGER BIZZELL

11/14/2018

MIGUEL A. ESCOBAR, L.S.L.S., R.P.L.S.
TEXAS REG. NO. 5630

STATE OF TEXAS REGISTERED MIGUEL ANGEL ESCOBAR 5630 PROFESSIONAL LAND SURVEYOR

SURVEY OF
0.498 ACRES OUT OF THE HUGHES ADDITION
TO THE CITY OF GEORGETOWN
CONVEYED TO THOMAS L. PAXSON & JANIS ANDERSON-PAXSON
IN DOCUMENT NO. 2018095092, OFFICIAL PUBLIC RECORDS,
IN THE CLEMENT STUBBLEFIELD SURVEY A-558,
WILLIAMSON COUNTY, TEXAS

STEGER BIZZELL

ADDRESS 1978 S. AUSTIN AVENUE GEORGETOWN, TX 78626
METRO 512.930.9412 TEXAS REGISTERED ENGINEERING FIRM F-181 TBPLS FIRM No.10003700 WEB STEGERBIZZELL.COM
SERVICES >>ENGINEERS >>PLANNERS >>SURVEYORS

JOB No. 20548 DATE: 14-Nov-18 SHEET 1 of 1 DRAWN BY: SF REVIEWED BY: AR APPROVED BY: ME

L:\PROJECTS 2006\20548-1302 College St\Survey Data\CAD\20548-Survey.dwg, 11/14/2018 10:51:52 AM, MIGUEL, AutoCAD PDF (General Documentation).pc3

CITY OF GEORGETOWN

NOTICE OF PUBLIC HEARING

Comments from Neighboring Property Owners

You are being notified as a requirement of the City of Georgetown Unified Development Code. You are invited to express your views or concerns regarding the described petition by returning this comment form and/or by attending one or both of the scheduled public hearings on the matter.

Project Name:

Project Case Number: 2019-16-COA HARC Date: May 23, 2019 Case Manager: Madison Thomas

Name of Respondent: KEN BROWNING, FIRST United Methodist Church
(Please print name)

Signature of Respondent: Kenneth Browning
(Signature required for protest)

Address of Respondent: 401 E. UNIVERSITY AVE, GTOWN, TX
(Address required for protest)

I am in FAVOR: ✓ I OBJECT: _____

Additional Comments:

Written comments may be sent to City of Georgetown Planning Department, P. O. Box 1458 Georgetown, Texas 78627. Emailed comments may be sent to planning@georgetown.org. Any such comments may be presented to the Commission.

Planning Department Staff Report

Historic and Architectural Review Commission

Meeting Date: May 23, 2019
File Number: 2019-16-COA

AGENDA ITEM DESCRIPTION

Public Hearing and possible action on a request for a Certificate of Appropriateness for a 1.) residential alteration, 2.) residential addition, 3.) building height modification of 1-foot from the 15-foot maximum building height requirement to allow a building height of 16-feet, at the requested 15-foot setback of the underlying zoning district per Unified Development Code (UDC) Section 4.08.080.C 4.) a 10′ setback modification along the north property line into the required 25′ setback to allow for a residential structure (garage) 15′ from the property line per the Unified Development Code (UDC) Section 4.08d.080.D;
for the property located at 1302 S. College Street, bearing the legal description of 0.498 ac. Hughes Addition, Block 4n/pt (2019-16-COA). Madison Thomas, Historic and Downtown

AGENDA ITEM DETAILS

Project Name:	Residential Renovation
Applicant:	Pax-Sun Engineering, Inc.
Property Owner:	Tom Paxson
Property Address:	1302 S. College St.
Legal Description:	0.498 ac. Hughes Addition, Block 4n/pt
Historic Overlay:	Old Town Overlay
Case History:	N/A

HISTORIC CONTEXT

Date of construction:	1909
Historic Resources Survey Level of Priority:	1984 – High
	2007 - High
	2016 - High
National Register Designation:	Lane- Riley House
Texas Historical Commission Designation:	Recorded Texas Historic Landmark

APPLICANT'S REQUEST

The applicant is proposing to preserve the existing structure through maintenance and repair on the existing windows and siding. Additional proposed changes and reviewers are listed below:

Portions of the request are reviewed by HARC per UDC 3.13.010, including:

- ✓ Street facing additions on a contributing structure (porch 610 sq. ft.)
- ✓ Garage setback modification (10′ modification)
- ✓ Garage height modification at (1′ modification in height)
- ✓ Fence height modification (1′ modification)

Other elements of the request are review by staff per UDC 3.13.010, including:

- ✓ Non-street facing additions on a contributing structure (379 sq. ft.)
- ✓ Street facing on a non-contributing structure (new garage)
- ✓ Roof material restoration (cedar shakes)
- ✓ Paint changes
- ✓ Restoring a historic and architectural feature (changing the door to a window on the 2nd floor)

STAFF ANALYSIS

The subject structure is identified as a Center Passage plan house constructed in 1872. The 2016 Historic Resource Survey identifies it as a high priority structure, and an excellent or rare example of its type/ style, has significant associations which retains sufficient integrity. There is a significant amount of research that has been done on this historically significant structure. These supporting documents are included in the project attachments.

The applicant is proposing to add 379 sq. ft. to the existing 1305 sq. ft. without modifying the overall building height or original roofline. There will also be a 610 sq. ft. wrap-around porch to the rear of the existing structure which will be two minimally visible street facing facades. The portion of the porch visible from S. College St. is approx. 8.5′ in width and setback from the front façade of the historic home by 21′. The portion of the porch that is visible from E. 13th Street will also be 8.5′ in width and about 2′ from the north façade of the home. The street view will have a shed roof, wooden columns and the same foundation as the original home. The addition will not add any street facing facades or create any new visibility of structure or roof from the street. The addition will be significantly smaller than the existing square footage of the property.

The applicant is also proposing a 600 sq. ft. garage to be built behind the existing structure, facing E. 13th Street. It will have hardie siding with battens, wood windows and cedar shake roof to mimic the visual appearance of the historic house on the property. The applicant is requesting a modification to the required 25′ street-facing garage setback requirement. The proposed setback is positioned 15′ from the property line, to accommodate for the 32″ Live Oak that is located directly behind the proposed garage. The critical root zone of this tree is 16′, approximately the same distance the applicant is requesting to place the garage from the tree. The Old Town Overlay requires that structures meet the 15′ height at the prescribed setback. This structure will be 16′ in height at the 15′ setback, 1′ over what the code allows. This request is to accommodate for the roof design and pitch of the existing historic house. The purpose is to create a cohesive design across the site.

Fences located in a front yard or a side setback abutting a local or collector-level street are permitted with the limitation of a 3′ high fence in the Old Town Overlay. The applicant is requesting to install a 4′ high fence to assist with screening the condensing units and containing pets.

The property is Recorded Texas Historic Landmark, which does require proposed changes to be reviewed by the Texas Historical Commission. They review project to the Secretary of Interior's Standards. These standards were used to write the Design Guidelines, however, they are more stringent from a preservation standpoint. The Texas Historical Commission will review the proposed changes and provide the applicants with their recommendations. It is important to note, that they cannot enforce any recommendations or best practices, only the city has the ability to implement regulations.

APPLICABLE DESIGN GUIDELINES

The following guidelines are applicable to the proposed scope of work in accordance with the adopted Downtown and Old Town Design Guidelines:

CHAPTER 7 DESIGN GUIDELINES FOR ADAPTIVE RE-USE, ADDITIONS & ALTERATIONS	
7.1 Avoid alterations that would damage historic features. ✓ Avoid alterations that would hinder the ability to interpret the design character of the original building. ✓ Alterations that seek to imply an earlier period than that of the building are inappropriate.	**Complies** The proposed porch will be added to a new non-street facing facade and only a minimal portion of the porch will be visible from the street. The façade to which the porch is being added is not a primary façade.
7.2 Properties designated by the City as a High or Medium Priority Historic Structure should be preserved and their historic character retained. ✓ Due to special circumstances, a structure's historic priority may change over time (because a reduced number of similar style structures in stable condition still exist within the district or city, or if unknown historic information becomes available that adds significance).	**Complies** The proposed addition is minor. The Texas Historical Commission has also reviewed the proposed changes and provided a letter in support, which is included in the attached materials.
7.6 Design a new addition such that the original character can be clearly seen. In this way, a viewer can understand the history of changes that have occurred to the building. ✓ An addition should be made distinguishable from the original building, even in subtle ways, such that the character of the original can be interpreted. ✓ Creating a jog in the foundation between the original and new structures may help to define an addition.	**Complies** The porch is approximately 8.5' in width on the street facing facades and will be minimally visible with the shed roof and posts. These materials are compatible and the placement of the porch and use of a different roofing material

✓ The amount of foundation exposed on the addition should match that of the original building, in appearance, detail, and material. ✓ Even applying a new trim board at the connection point between the addition and the original structure can help define the addition. ✓ See also Preservation Briefs #14: New Exterior Additions to Historic Buildings, published by the National Park Service. https://www.nps.gov/tps/how-to-preserve/briefs/14-exterior-additions.htm	identify it as being a new structure.
7.7 Place an addition at the rear of a building or set it back from the front to minimize the visual impacts. ✓ Setting an addition back from any primary, character-defining façade will allow the original proportions and character to remain prominent. ✓ Locating an addition at the front of a structure is inappropriate, and an addition should be to the rear of the building, when feasible.	**Complies** The porch is being added to the south façade of the home and will be setback approx. 21′ from the front façade of the home. This helps to visually differentiate it from the original home.
7.8 Do not obscure, damage, destroy, or remove original architectural details and materials of the primary structure. ✓ When preserving original details and materials, follow the guidelines presented earlier in this chapter.	**Partially Complies** The south façade of the house will include a porch addition. The materials, including original windows, removed from the original structure to allow for the porch addition, will be used to repair and replace the historic materials on the street-facing facades of the home. The windows will be saved for future replacement if needed.
7.9 An addition shall be compatible in scale, materials, and character with the main building. ✓ An addition shall relate to the historic building in mass, scale, and form. It should be designed to remain subordinate to the main structure. ✓ While a smaller addition is visually preferable, if a residential addition would be significantly larger than the original building, one option is to separate it from the primary building, when feasible, and then link it with a smaller connecting structure.	**Complies** The porch addition will have the same foundation and design for the deck, posts, stairs and trim as the original structure.

✓ An addition should be simple in design to prevent it from competing with the primary facade. ✓ Consider adding dormers to create second story spaces before changing the scale of the building by adding a full second floor.	
7.10 The roof form of a new addition shall be in character with that of the primary building. ✓ Typically, gable, hip, and shed roofs are appropriate for residential additions. Flat roofs are appropriate for commercial buildings in the downtown area. ✓ Repeat existing roof slopes, overhangs, and materials. ✓ If the roof of the primary building is symmetrically proportioned, the roof of the addition should be similar. ✓ The roofs of additions should not interfere with the original roof form by changing its basic shape or view of the original roof, and should have a roof form compatible with the original building.	**Complies** The porch roof is shed style, typical of historic porches. The original is a simple gabled
CHAPTER 8 DESIGN GUIDELINES FOR SITE DESIGN	
8.25 A new fence may be considered in transitional areas with a residential context. ✓ A fence that defines a front yard should be low to the ground and "transparent" in nature. • A front yard fence should not exceed three feet in height. ✓ Solid, "stockade" fences do not allow views into front yards and are inappropriate. ✓ Chain link, concrete block, unfaced concrete, plastic, solid metal panel, fiberglass, plywood, and mesh construction fences are not appropriate. – A side or rear yard fence that is taller than its front yard counterpart may be considered. See UDC Chapter 8 for fence standards. **N/A**	**Partially Complies** The applicant is requesting 4′ instead of 3′. The change will still meet the purpose of the policy, in that the majority of the guidelines are being met. The 4′ tall fence would be able to screen mechanical equipment for a corner lot with two street facing sides. The fence will still define the front yard and have a transparent nature.
CHAPTER 14 DESIGN GUIDELINES FOR INFILL CONSTRUCTION AND ADDITIONS IN THE OLD TOWN OVERLAY DISTRICT	
14.1 Locate a new building using a residential type setback. – Align the new non-residential building front at a setback that is in context with the area properties- **N/A** – New residential buildings should meet the minimum front setback requirement of the UDC or use an increased setback if the block has historically developed with an extended setback- **N/A**	**Complies** The porch is added to the south and west facades.

✓ Generally, additions should not be added to the front facing façades. – Where no sidewalk exists, one should be installed that aligns with nearby sidewalks. **N/A**	
14.9 Historic building materials of existing buildings should be maintained and respected when additions are proposed. ✓ See Chapter 5 for design guidelines related to maintaining and protecting historic building materials.	**Complies** The materials on the south façade that will have the new addition will be used to repair the existing materials on the two street-facing facades. They will repair the windows and siding pieces that were identified as being damaged on the Plans & Renderings.
14.10 Non-traditional siding materials are discouraged. ✓ Typically, artificial stone and brick veneer are not appropriate. ✓ Asphalt shingles are not appropriate. ✓ Aluminum and vinyl are not appropriate.	**Complies** The porch will be made of wood.
14.11 Avoid alterations that would damage historic features. ✓ Avoid alterations that would hinder the ability to interpret the design character of the original building or period of significance. ✓ Alterations that seek to imply an earlier period than that of the building are inappropriate.	**Complies** The addition of the porch will not damage the existing historic features.
14.13 Design a new addition such that the original character can be clearly seen. ✓ In this way, a viewer can understand the history of changes that have occurred to the building. ✓ An addition should be distinguishable from the original building, even in subtle ways, such that the character of the original can be interpreted. ✓ Creating a jog in the foundation between the original and new structures may help to define an addition. ✓ Even applying new trim board at the connection point between the addition and the original structure can help define the addition. ✓ See also Preservation Briefs #14: New Exterior Additions to Historic Buildings, published by the National Park Service.	**Complies** The porch is approximately 8.5′ in width on the street facing facades and will be minimally visible with the shed roof and posts. It will be setback approx. 20′ from the front façade.

14.14 Place an addition at the rear of a building or set it back from the front to minimize the visual impacts. ✓ Setting an addition back from any primary, character-defining façade will allow the original proportions and character to remain prominent. ✓ Locating an addition at the front of a structure is inappropriate, and an addition should be to the rear of the building, when feasible.	**Complies** The porch is being added to the south façade of the home and will be setback from the front façade of the home approx. 21'. This helps to visually differentiate it from the original home.
14.15 Do not obscure, damage, destroy, or remove original architectural details and materials of the primary structure. ✓ When preserving original details and materials, follow the guidelines presented in this document.	**Partially Complies** The south façade of the house will include a porch addition. The materials, including original windows, removed from the original structure to allow for the porch addition, will be used to repair and replace the historic materials on the street-facing facades of the home. The windows will be saved for future replacement if needed.
14.16 An addition shall be compatible in scale, materials, and character with the main building. ✓ An addition shall relate to the historic building in mass, scale, and form. It should be designed to remain subordinate to the main structure. ✓ While a smaller addition is visually preferable, if a residential addition would be significantly larger than the original building, one option is to separate it from the primary building, when feasible, and then link it with a smaller connecting structure. ✓ An addition should be simple in design to prevent it from competing with the primary facade. ✓ Consider adding dormers to create second story spaces before changing the scale of the building by adding a full second floor.	**Complies** The porch addition will have the same foundation and design for the deck, posts, stairs and trim as the original structure.
14.17 An addition shall be set back from any primary, character-defining façade. ✓ An addition should be to the rear of the building, when feasible.	**Complies** The porch is being added to the south façade of the home and will be setback from the front

	façade of the home approx. 21'. This helps to visually differentiate it from the original home.
14.18 The roof of a new addition shall be in character with that of the primary building. ✓ Typically, gable, hip, and shed roofs are appropriate for residential additions. Flat roofs may be more appropriate for commercial buildings. ✓ Repeat existing roof slopes and materials. ✓ If the roof of the primary building is symmetrically proportioned, the roof of the addition should be similar.	**Complies** The porch roof is shed style, typical of historic porches. The original is a simple gabled.
14.19 The architectural features of existing buildings should be protected when additions are proposed. ✓ See Chapter 4 for design guidelines related to protecting architectural features.	**Partially Complies** The south façade of the house will have the addition placed on it, and these materials will be used to repair and replace the historic materials on the street-facing facades of the home. The extra windows will be saved for future replacement if needed.
14.20 An addition shall not damage or obscure architecturally important features. ✓ For example, loss or alteration of a porch should be avoided. ✓ Addition of a porch may be inappropriate	**Complies** The proposed porch is appropriate and will not detract from the existing house or its features.
14.22 Individual building elements of existing buildings should be preserved, protected, and replicated where appropriate when additions are proposed. ✓ See Chapter 6 for design guidelines related to preserving individual building elements.	**Complies**

Additional Criteria for Approval of a Setback Modification

1. The Historic and Architectural Review Commission may grant a Certificate of Appropriateness, per Section 4.08.080.D of this Code, to modify the setback standards of the underlying base zoning district for residential properties located within the Old Town Overlay District.
2. HARC may take in consideration the following in determining whether to approve a Certificate of Appropriateness for a setback exception:

Approval Criteria	
a. Whether the proposed setback encroachment is solely a matter of convenience;	**Complies** The proposed location of the garage is appropriate as it is being proposed at the rear of the lot near an existing curb cut. There are a significant amount of existing trees around on the lot which limit the potential locations. It would not be appropriate to locate the garage off of S. College Street, due to the significant amount of trees between the structure and the lot line. There is not sufficient room to place the garage on the lot between the property line and the house to accommodate the 25′ setback. The proposed location is ideal, however if the structure were to be pushed back a tree would have to be removed. There is a 32″ Live Oak that is located directly behind the proposed garage. The critical root zone of this tree is 16′, and the proposed distance from the structure to the tree will be approx. 16′ to accommodate for the critical root zone.
b. Whether there is adequate room on the site to allow the proposed addition or new structure without encroaching into the setback;	**Complies** Placing the garage between the south property line and the house would require significant grading and would be impactful to the overall character of the existing structure. The garage should not be placed in the yard between the front of the house and S. College St. There is no room on the E. 13th Street side between the property line and the house to meet the 25′ setback requirements. The only feasible location is between the rear of the

	home and the west (rear) property line. The structure could be placed back further, however it would require a tree to be removed.
c. Whether the proposed setback is compatible and in context within the block in which the subject property is located;	**Partially Complies** The block is defined by the properties adjacent to Ash St., E. 14th Street, S. College Street and E. 13th Street. There are a few other accessory structures that are a similar distance setback from these streets. There are accessory structures that are located further into the rear of the properties behind the existing homes at 503 and 506 14th Street.
d. Whether the proposed addition or new structure will be set closer to the street than other units within the block;	**Partially Complies** The block is defined by the properties adjacent to Ash St., E. 14th Street, S. College Street and E. 13th Street. There are accessory structures that are a similar distance setback from these streets, specifically the two structures located at 1310 S. College Street. There are also a few properties with accessory structures that are located further into the rear of the properties behind the existing homes.
e. Whether the proposed structure is replacing a structure removed within the past year;	N/A
f. Whether the proposed structure will replace a structure that previously existed with relatively the same footprint and encroachment as proposed;	N/A
g. If the proposed encroachment is for a structure that is replacing another structure, whether the proposed structure is significantly larger than the original;	N/A
h. If the proposed encroachment is for an addition, the scale of the addition compared to the original house;	N/A
i. Reserved.	
j. The size of the proposed structure compared to similar structures within the same block;	**Complies** There are a few other properties along the block that have a two-car

	garage carport of a similar size and scale.
k. Whether the proposed addition or new structure will negatively impact adjoining properties, including limiting their ability to maintain existing buildings;	**Complies** The proposed location of this structure will not negatively impact the adjoining property, which is parking lot.
l. Whether there is adequate space for maintenance of the proposed addition or new structure and/or any adjacent structures; and/or	**Complies** The setback from the street property line of 15′ which would allow the maintenance of the structure.
m. Whether the encroachment would enable existing large trees or significant features of the lot to be preserved.	**Complies** The proposed location of the structure is to retain a safe distance from the existing trees on the property.

Additional Criteria for Approval of a Height Modification
HARC may grant a request for a variation in height from the standards set forth in Section 4.08.020.A only if it determines that the following goals or purposes will still be achieved:

a. Views to and from the Courthouse and to and from the Town Square Historic District will be protected; and	**Complies**
b. The character of the Downtown Overlay District and the Town Square Historic District will be defined, reinforced, and preserved; and	**N/A**
c. The relationship of the proposed project to the existing structures in the immediate vicinity remains consistent; and	**Complies**
d. The proposed project allows for the best utilization of redevelopment in the Downtown Overlay District and the Town Square Historic District; and	**N/A**
e. The proposed project protects the historic buildings in the Downtown Overlay District.	**N/A**

Fences located in a front yard or a side setback abutting a local or collector-level street are allowed with the following limitations:

1. Fences shall be limited to four feet in height, except in the Old Town Overlay District where height is limited to three feet.	**Does not comply** The proposed additional fencing is proposed at 4'. It is only 1' over what the code requires.
2. Fences shall be at least 50 percent (50%) transparent. For example, a wrought iron fence or picket fence that has openings the width of the picket.	**Complies**
3. Chainlink fences are prohibited in these locations.	**Complies**

CRITERIA FOR APPROVAL

In accordance with Section 3.13.030 of the Unified Development Code, the HARC must consider the following criteria:

SECTION 3.13.030 CRITERIA	FINDINGS
1. The application is complete and the information contained within the application is correct and sufficient enough to allow adequate review and final action;	**Complies**
2. Compliance with any design standards of this Code;	**Partially Complies** Seeking modifications
3. Compliance with the Secretary of the Interior's Standards for the Treatment of Historic Properties to the most extent practicable;	**Complies**
4. Compliance with the adopted Downtown and Old Town Design Guidelines, as may be amended from time to time, specific to the applicable Historic Overlay District;	**Partially Complies** Seeking fence modification
5. The general historic, cultural, and architectural integrity of the building, structure or site is preserved;	**Complies**
6. New buildings or additions are designed to be compatible with surrounding properties in the applicable historic overlay district;	**Complies**
7. The overall character of the applicable historic overlay district is protected; and	**Complies**
8. The Master Sign Plan is in keeping with the adopted Downtown and Old Town Design Guidelines and character of the historic overlay district.	**N/A**

STAFF RECOMMENDATION

Staff finds that the proposed addition location, proposed materials, height and massing meet the Design Guidelines. The design respects the historic integrity of the existing building and does not have a significant visual impact on the historic structure. The proposed garage modification of height and setback meet the above criteria and work to retain the existing trees on the property as well as create a cohesive design between the two structures on the site. The proposed fence height of 4' will not negatively impact the character of the neighborhood. Approval is recommend for all requests.

PUBLIC COMMENTS

As of the date of this report, staff has not received one comment in favor of the proposed project.

ATTACHMENTS

Exhibit 1 – Location Map
Exhibit 2 - Letter of Intent
Exhibit 3- Plans (rendering) and Specifications
Exhibit 4- Historical Information
Exhibit 5- Texas Historical Commission Letter

SUBMITTED BY

Madison Thomas, AICP, Historic & Downtown Planner

City of Georgetown, Texas
Historic and Architectural Review
May 23, 2019

SUBJECT:
Updates, Commissioner questions and comments. Sofia Nelson, Planning Director

ITEM SUMMARY:
Update on UDC amendments

FINANCIAL IMPACT:
N/A

SUBMITTED BY:
Nat Waggoner, Long Range Planning Manager